Pioneer sound.vision.soul

Service Manual

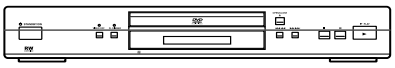

DV-656A-S

ORDER NO.
RRV2649

DVD PLAYER

DV-656A-S
DV-656A-K

THIS MANUAL IS APPLICABLE TO THE FOLLOWING MODEL(S) AND TYPE(S).

Model	Type	Power Requirement	Reginal restriction codes (Region No.)	Remarks
DV-656A-S	WYXJ	AC220-240V	2	
DV-656A-K	WYXJ	AC220-240V	2	

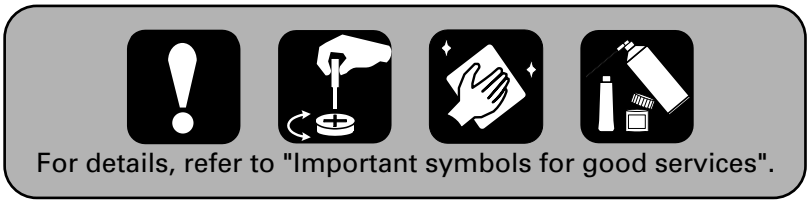

PIONEER CORPORATION 4-1, Meguro 1-chome, Meguro-ku, Tokyo 153-8654, Japan
PIONEER ELECTRONICS (USA) INC. P.O. Box 1760, Long Beach, CA 90801-1760, U.S.A.
PIONEER EUROPE NV Haven 1087, Keetberglaan 1, 9120 Melsele, Belgium
PIONEER ELECTRONICS ASIACENTRE PTE. LTD. 253 Alexandra Road, #04-01, Singapore 159936
ⓒ**PIONEER CORPORATION 2002**

T-ZZE JULY 2002 printed in Japan

SAFTY INFORMATION

This service manual is intended for qualified service technicians ; it is not meant for the casual do-it-yourselfer. Qualified technicians have the necessary test equipment and tools, and have been trainedto properly and safely repair complex products such as those covered by this manual.Improperly performed repairs can adversely affect the safety and reliability of the product and mayvoid the warranty. If you are not qualified to perform the repair of this product properly and safely, youshould not risk trying to do so and refer the repair to a qualified service technician.

WARNING !

THE AEL (ACCESSIBLE EMISSION LEVEL) OF THE LASER POWER OUTPUT IS LESS THAN CLASS 1 BUT THE LASER COMPONENT IS CAPABLE OF EMITTING RADIATION EXCEEDING THE LIMIT FOR CLASS 1.
A SPECIALLY INSTRUCTED PERSON SHOULD DO SERVICING OPERATION OF THE APPARATUS.

LASER DIODE CHARACTERISTICS

FOR DVD : MAXIMUM OUTPUT POWER : 5 mW
WAVELENGTH : 650 nm
FOR CD : MAXIMUM OUTPUT POWER : 5 mW
WAVELENGTH : 780 nm

LABEL CHECK

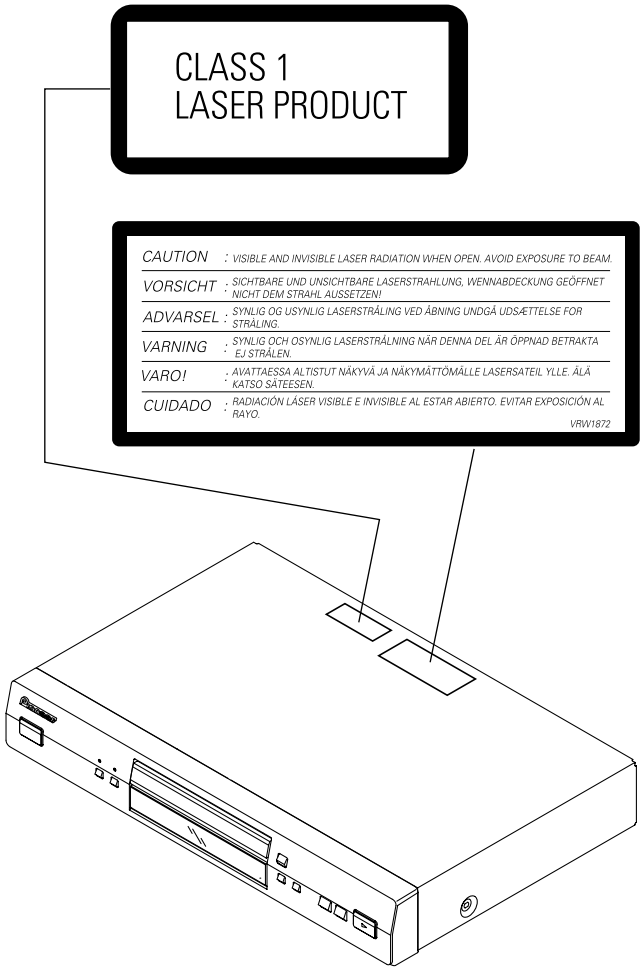

Additional Laser Caution

1. Loading-status detection switch (S101 on the LOAB assy) are detected by the microprocessor (IC601 in the DVDM assy).
   • To permit the laser diode to oscillate, it is required to set the loading-status detection switch for the clamp position (the center terminal of S101 is shorted to +3V).
   When the voltage of IC101-pin 20 is +3V, IC601 (microprocessor) -pin 83 is +3V and IC601-pin 84 is +3V, 650nm laser diode for DVD oscillates in the DVDM Assy.
   When the voltage of IC101-pin 20 is +3V, IC601 (microprocessor) -pin 83 is 0V (GND) and IC601-pin 84 is +3V, 780nm laser diode for CD oscillates in the DVDM Assy.
   In the test mode * , the laser diode oscillates when microprocessor detects a PLAY signal, or when the PLAY key is pressed (S104 ON in the FLKY assy), with the above requirements satisfied.
2. When the cover is open, close viewing through the objective lens with the naked eye will cause exposure to the laser beam.

* : See page 61.

[Important symbols for good services]
In this manual, the symbols shown-below indicate that adjustments, settings or cleaning should be made securely.
When you find the procedures bearing any of the symbols, be sure to fulfill them:

1. Product safety

You should conform to the regulations governing the product (safety, radio and noise, and other regulations), and should keep the safety during servicing by following the safety instructions described in this manual.

2. Adjustments

To keep the original performances of the product, optimum adjustments or specification confirmation is indispensable. In accordance with the procedures or instructions described in this manual, adjustments should be performed.

3. Cleaning

For optical pickups, tape-deck heads, lenses and mirrors used in projection monitors, and other parts requiring cleaning, proper cleaning should be performed to restore their performances.

4. Shipping mode and shipping screws

To protect the product from damages or failures that may be caused during transit, the shipping mode should be set or the shipping screws should be installed before shipping out in accordance with this manual, if necessary.

5. Lubricants, glues, and replacement parts

Appropriately applying grease or glue can maintain the product performances. But improper lubrication or applying glue may lead to failures or troubles in the product. By following the instructions in this manual, be sure to apply the prescribed grease or glue to proper portions by the appropriate amount.For replacement parts or tools, the prescribed ones should be used.

CONTENTS

SAFTY INFORMATION 2
1. SPECIFICATIONS 5
2. EXPLODED VIEWS AND PARTS LIST 6
2.1 PACKING 6
2.2 EXTERIOR SECTION 8
2.3 FRONT PANEL SECTION 10
2.4 LOADING MECHA ASSY 12
2.5 TRAVERSE MECHANISM ASSY-S 14
3. BLOCK DIAGRAM AND SCHEMATIC DIAGRAM 16
3.1 BLOCK DIAGRAM 16
3.2 LOAB ASSY and OVERALL WIRING DIAGRAM 20
3.3 DVDM ASSY 1/4 [FTS BLOCK] 22
3.4 DVDM ASSY 2/4 [FR BLOCK] 24
3.5 DVDM ASSY 3/4 [EBY/AV1 BLOCK] 26
3.6 DVDM ASSY 4/4 [VENC BLOCK] 28
3.7 JACB ASSY 1/2 [AUDIO BLOCK] 30
3.8 JACB ASSY 2/2 [VIDEO BLOCK] 32
3.9 SACDB ASSY 34
3.10 FLKY and KEYB ASSYS 36
3.11 SCRB ASSY 38
3.12 POWER SUPPLY UNIT 40
3.13 WAVEFORMS [DVDM ASSY] 41
3.14 WAVEFORMS [JACB ASSY] 42
4. PCB CONNECTION DIAGRAM 43
4.1 LOAB ASSY 43
4.2 DVDM ASSY 44
4.3 JACB ASSY 46
4.4 SACDB ASSY 50
4.5 SCRB ASSY 51
4.6 FLKY and KEYB ASSYS 52
4.7 POWER SUPPLY UNIT 54
5. PCB PARTS LIST 55
6. ADJUSTMENT 59
6.1 ADJUSTMENT ITEMS AND LOCATION 59
6.2 JIGS AND MEASURING INSTRUMENTS 59
6.3 NECESSARY ADJUSTMENT POINTS 60
6.4 TEST MODE 61
6.5 MECHANISM ADJUSTMENT 62
7. GENERAL INFORMATION 65
7.1 DIAGNOSIS 65
7.1.1 ID NUMBER AND ID DATA SETTTING 65
7.1.2 SELF-DIAGNOSIS FUNCTION OF PICKUP DEFECTIVE 67
7.1.3 TEST MODE SCREEN DISPLAY 68
7.1.4 SELF-DIAGNOSIS FUNCTION 70
7.1.5 FUNCTION SPECIFICATION OF THE SERVICE MODE 71
7.1.6 ERROR DISPLAY 72
7.1.7 TEST POINTS LOCATION & WAVEFORMS 75
7.1.8 TROUBLE SHOOTING 77
7.1.9 DISASSEMBLY 79
7.2 IC 85
7.3 DISC / CONTENT FORMAT PLAYBACK COMPATIBILITY 119
7.4 CLEANING 120
8. PANEL FACILITIES 121

1. SPECIFICATIONS

System ..... DVD Player
Power requirements ..... 220–240 V, 50/60 Hz
Power consumption ..... 14 W
Power consumption (standby) ..... 0.4 W
Weight ..... 2.7 kg
Dimensions ..... 420 (W) x 69 (H) x 278 (D) mm
Operating temperature ..... +5°C to +35°C
Operating humidity ..... 5% to 85% (no condensation)

S-Video output

Y (luminance) - Output level ..... 1 Vp-p (75 Ω)
C (color) - Output level ..... 286 mVp-p (75 Ω)
Jack ..... S-Video jack

Video output

Output level ..... 1 Vp-p (75 Ω)
Jack ..... RCA jack

AV connector output

AV Connector (21-pin connector assignment)
AV connector output ..... 21-pin connector
This connector provides the video and audio signals for connection to a compatible colour TV or monitor.

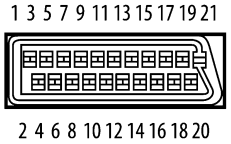

PIN no.

1	Audio 2/R out	11	G out
3	Audio 1/L out	15	R or C out
4	GND	17	GND
7	B out	19	Video out or Y out
8	Status	21	GND

• Manufactured under license from Dolby Laboratories. “Dolby” and the double-D symbol are trademarks of Dolby Laboratories.
• “DTS” is a registered trademark of Digital Theater Systems, Inc.
• TruSurround and the (●) ® symbol are trademarks of SRS Labs, Inc. TruSurround technology is incorporated under license from SRS Labs, Inc.

Audio output (1 stereo pair)

Output level ..... During audio output 200 mVrms (1 kHz, –20 dB)
Number of channels 2
Jacks ..... RCA jack

Audio output (multi-channel / L, R, C, SW, LS, RS)

Output level ..... During audio output 200 mVrms (1 kHz, –20 dB)
Number of channels 6
Jacks ..... RCA jack

Digital audio characteristics

Frequency response
..... 4 Hz to 44 kHz(DVD fs: 96 kHz)
..... 4 Hz to 88 kHz (DVD-Audio fs: 192 kHz)
S/N ratio ..... 118 dB
Dynamic range ..... 108 dB
Total harmonic distortion ..... 0.001 %
Wow and flutter ..... Limit of measurement (0.001% W. PEAK) or lower

Digital output

Optical digital output ..... Optical digital jack
Coaxial digital output ..... RCA jack

Other terminals

Control in ..... Minijack (3.5 ø)
Control out ..... Minijack (3.5 ø)

Accessories

Stereo audio cable 1
Video cable 1
Power cable 1
Remote control 1
AA/R6P dry cell batteries 2
Operating Instructions 3
Warranty card 1

Note

- The specifications and design of this product are subject to change without notice, due to improvement.

● Accessories

• Stereo Audio Cable (VDE1052)
(L = 1.5m)

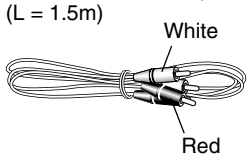

• Power Cable (ADG1154)

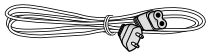

• AA/R6P Dry Cell Batteries

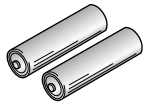

• Video Cable (VDE1053)
(L = 1.5m)

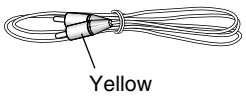

• Remote Control (VXX2800)

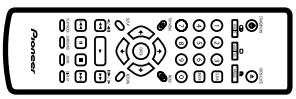

2. EXPLODED VIEWS AND PARTS LIST

NOTES:
- *Parts marked by "NSP" are generally unavailable because they are not in our Master Spare Parts List.*
- *The ⚠ mark found on some component parts indicates the importance of the safety factor of the part. Therefore, when replacing, be sure to use parts of identical designation.*
- *Screws adjacent to ▼ mark on product are used for disassembly.*
- *For the applying amount of lubricants or glue, follow the instructions in this manual. (In the case of no amount instructions, apply as you think it appropriate.)*

2.1 PACKING

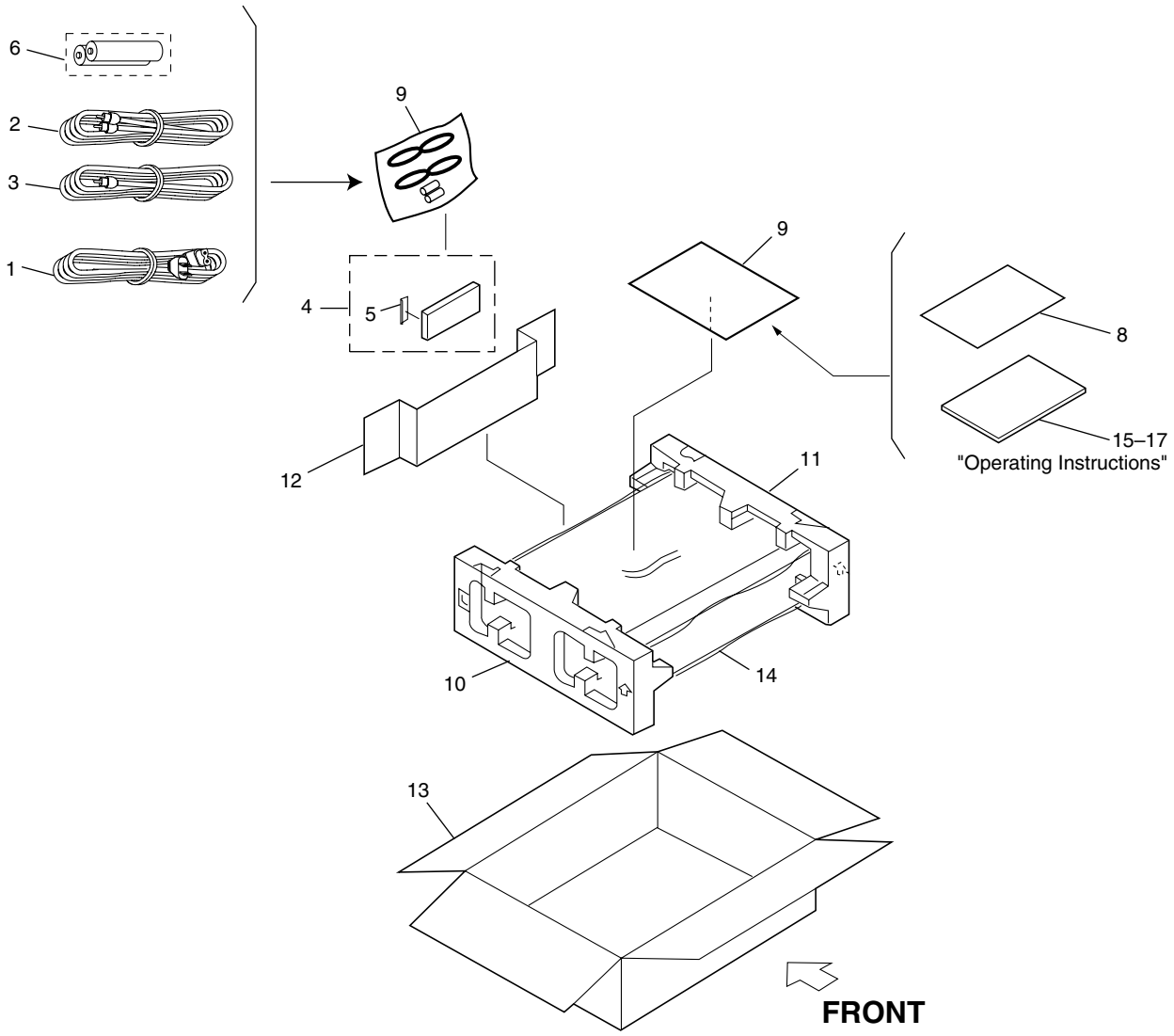

PACKING parts List

Mark	No.	Description	Part No.
⚠	1	Power Cable	ADG1154
	2	Stereo Audio Cable (L = 1.5m)	VDE1052
	3	Video Cable (L = 1.5m)	VDE1053
	4	Remote Control	VXX2800
	5	Battery Cover	VNK4997
NSP	6	AA/R6P Dry Cell Battery	VEM1031
	7	•••••	
NSP	8	Warranty Card	ARY7022
	9	Polyethylene Bag	VHL1051
	10	Pad L	VHA1307
	11	Pad R	VHA1308
	12	Paper Board	VHC1096
	13	Packing Case	See Contrast table (2)
	14	Mirror Mat Sheet	Z23-007
	15	Operating Instructions (English / Spanish)	VRD1160
	16	Operating Instructions (French / German)	VRD1161
	17	Operating Instructions (Italian / Dutch)	VRD1162

(2) CONTRAST TABLE

DV-656A-S/WYXJ and DV-656A-K/WYXJ are constructed the same except for the following:

Mark	No.	Symbol and Description	DV-656A-S/ WYXJ	DV-656A-K/ WYXJ
	13	Packing Case	VHG2223	VHG2246

2.2 EXTERIOR SECTION

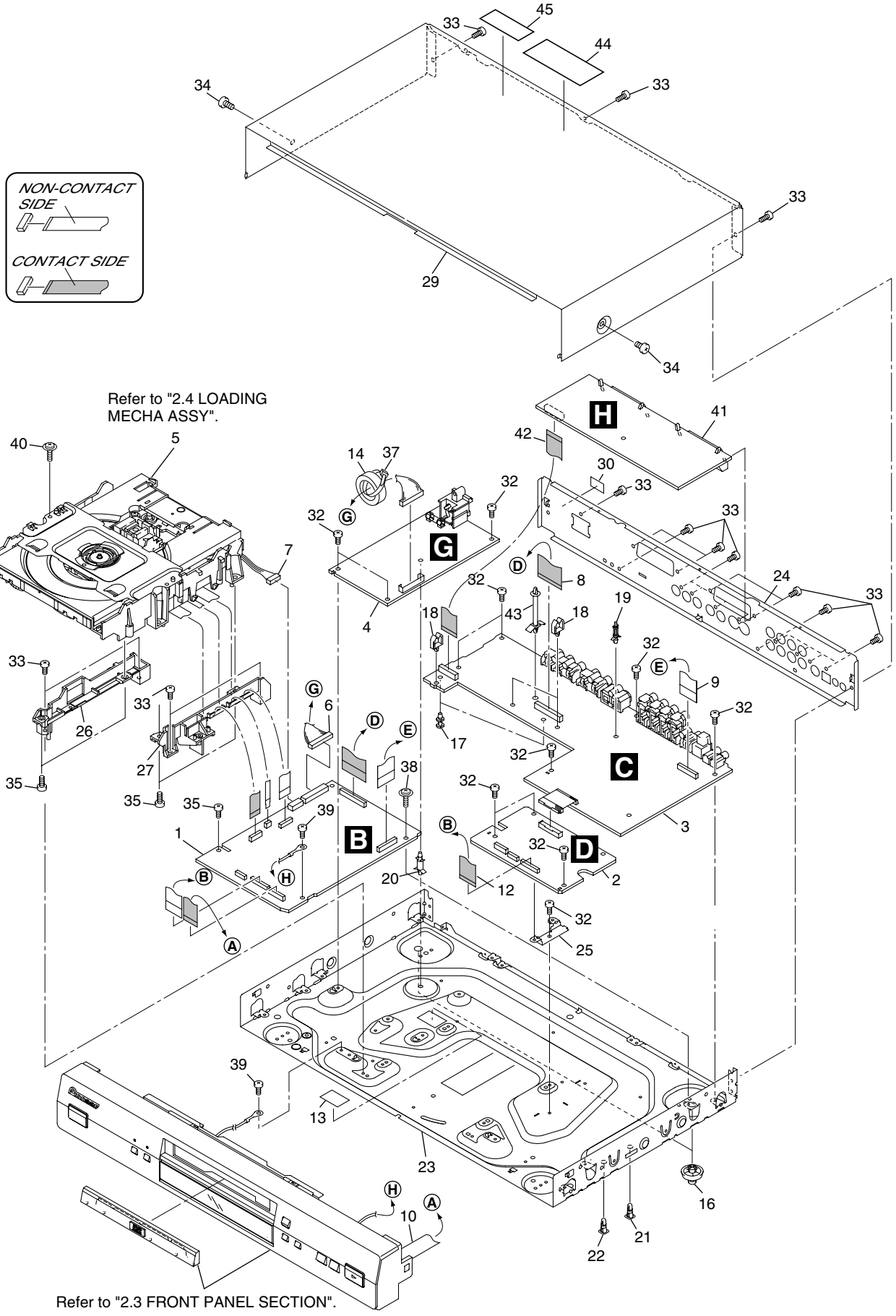

EXTERIOR SECTION parts List

Mark	No.	Description	Part No.
	1	DVDM Assy	VWS1539
	2	SACDB Assy	VWG2378
	3	JACB Assy	VWV1914
⚠	4	POWER SUPPLY Unit	VWR1352
NSP	5	LOADING MECHA Assy	VWT1196
	6	Connector Assy	PF13PP-D25
	7	Connector Assy	PG05KK-E27
	8	FFC (30P, JACB)	VDA1905
	9	FFC (21P, JACB)	VDA1906
	10	FFC (17P, FLKB)	VDA1907
	11	•••••	
	12	FFC (40P, SACD)	VDA1910
	13	F Cushion	VEB1348
	14	Ferrite Core	VTH1044
	15	•••••	
	16	LEG Assy SX	AEC7113
NSP	17	PCB Spacer (3 x 6)	AEC7156
	18	Mini Clamp	AEC7373
NSP	19	PCB Support	REC1285
	20	PCB Support	VEC2184
	21	PCB Holder	VEC2283
	22	PCB Holder	VEC2283
NSP	23	Base Chassis	VNA2521
	24	Rear Panel	See Contrast table (2)
NSP	25	PCB Base	VNE2276
	26	Adapter 14L	VNL1941
	27	Adapter 14R	VNL1942
	29	Bonnet Case S	See Contrast table (2)
NSP	30	ID Label	VRW1877
	31	•••••	
	32	Screw	BBZ30P060FMC
	33	Screw	BBZ30P080FZK
	34	Screw	See Contrast table (2)
	35	Screw	PPZ30P080FMC
	36	•••••	
NSP	37	Binder	ZCA-BK1
	38	Screw	IBZ30P080FCC
	39	Screw	BBZ30P060FCC
	40	Screw	Z39-019
	41	SCRB Assy	VWV1922
	42	FFC (19P, SCRB)	VDA1908
	43	PCB Holder	VEC2215
	44	Label	VRW1872
	45	Class1 Caution Label	VRW1889

(2) CONTRAST TABLE

DV-656A-S/WYXJ and DV-656A-K/WYXJ are constructed the same except for the following:

Mark	No.	Symbol and Description	DV-656A-S/ WYXJ	DV-656A-K/ WYXJ
	24	Rear Panel	VNA2462	VNA2487
	29	Bonnet Case S	VXX2841	VXX2842
	34	Screw	BCZ40P060FNI	BCZ40P060FZK

2.3 FRONT PANEL SECTION

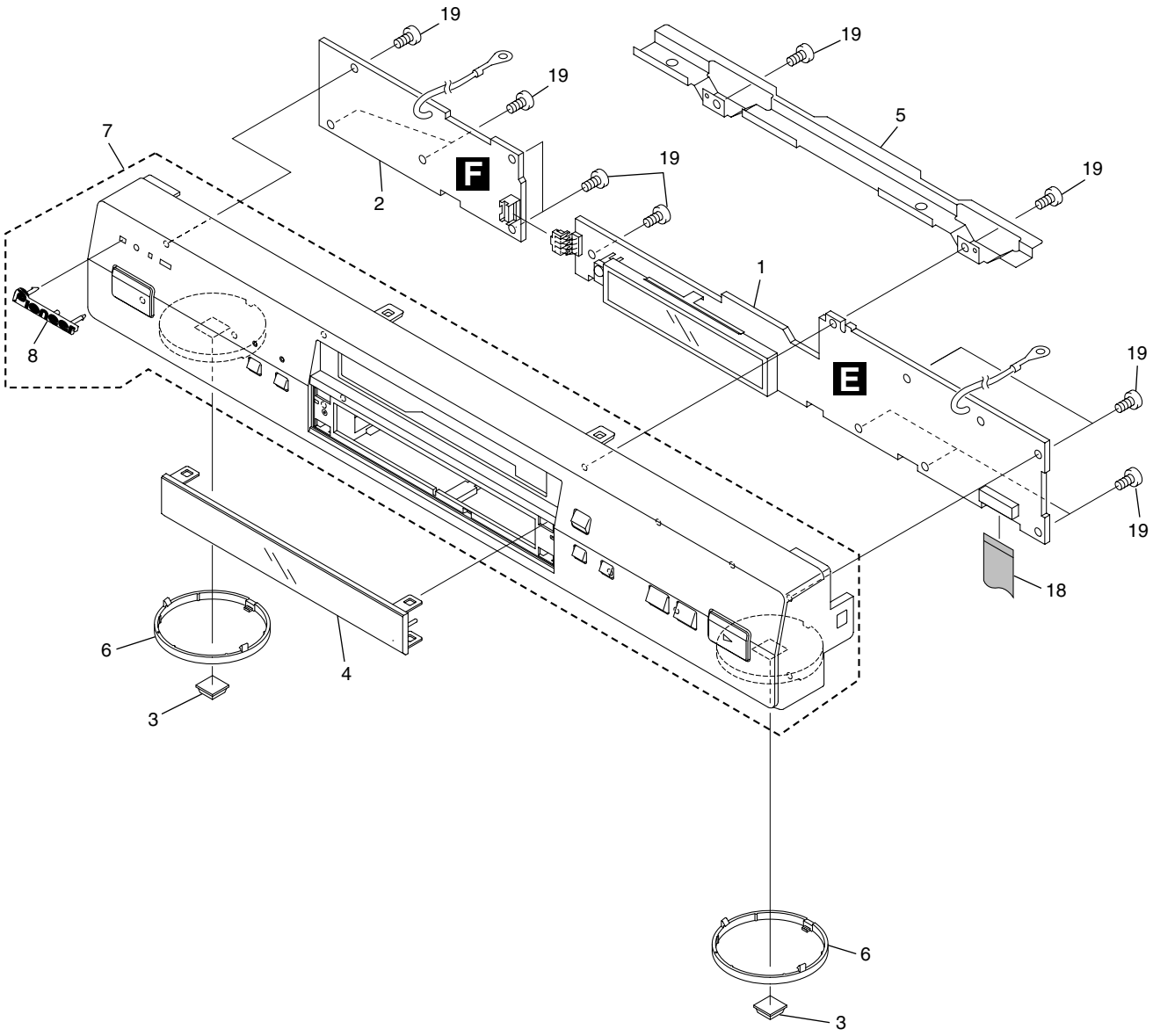

• Tray Panel Section

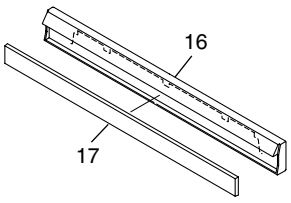

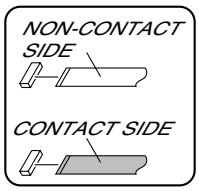

FRONT PANEL SECTION parts List

Mark	No.	Description	Part No.
	1	FLKY Assy	VWG2355
	2	KEYB Assy	VWG2366
	3	Rubber Foot	VEB1325
	4	FL Lens	VNK5028
	5	FP Angle	VNE2267
	6	Ring	VNK4996
	7	Front Panel Assy	See Contrast table (2)
	8	Pioneer Badge	See Contrast table (2)
	9	•••••	
	10	•••••	
	11	•••••	
	12	•••••	
	13	•••••	
	14	•••••	
	15	•••••	
	16	Tray Panel	See Contrast table (2)
	17	Door	See Contrast table (2)
	18	FFC (17P, FLKB)	VDA1907
	19	Screw	BBZ30P100FZK

(2) CONTRAST TABLE

DV-656A-S/WYXJ and DV-656A-K/WYXJ are constructed the same except for the following:

Mark	No.	Symbol and Description	DV-656A-S/ WYXJ	DV-656A-K/ WYXJ
	7	Front Panel Assy	VXA2516	VXA2530
	8	Pioneer Badge	VAM1129	XAM3006
	16	Tray Panel	VNK5020	VNK5021
	17	Door	VEC2278	VEC2302

2.4 LOADING MECHA ASSY

Note :

Refer to
" ■ Application of Lubricant".

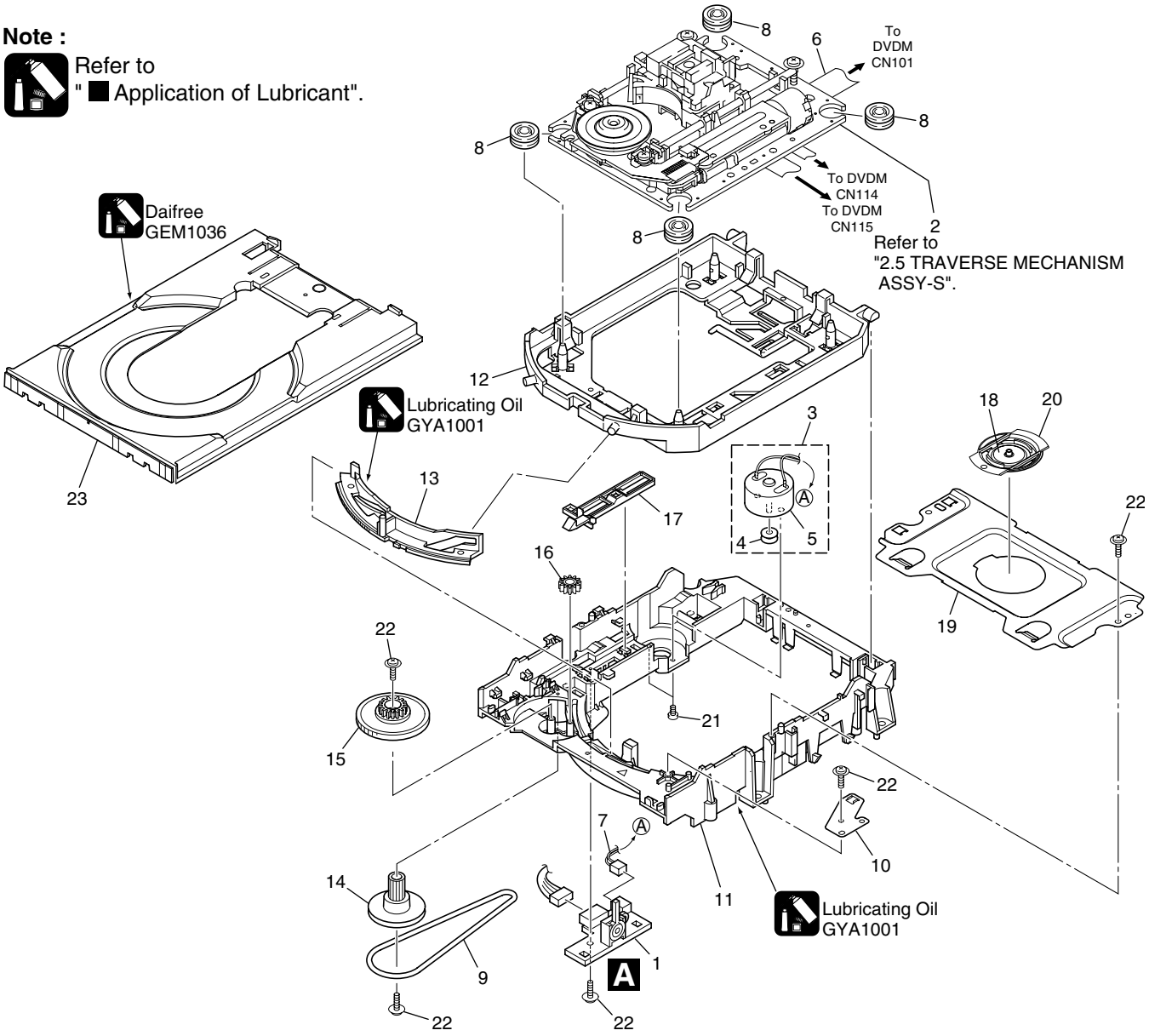

LOADING MECHA ASSY parts List

Mark	No.	Description	Part No.
NSP	1	LOAB Assy	VWG2346
	2	Traverse Mechanism Assy-S	VXX2782
	3	Loading Motor Assy	VXX2505
	4	Motor Pulley	PNW1634
	5	Carriage DC Motor / 0.3W	PXM1027
	6	Flexible Cable (26P)	VDA1864
	7	Connector Assy 2P	VKP2253
	8	Float Rubber	VEB1327
	9	Belt	VEB1330
	10	Stabilizer	VNE2253
	11	Loading Base	VNL1917
	12	Float Base DVD	VNL1918
	13	Drive Cam	VNL1919
	14	Gear Pulley	VNL1921
	15	Loading Gear	VNL1922
	16	Drive Gear	VNL1923
	17	SW Lever	VNL1925
	18	Clamper Plate	VNE2251
	19	Bridge	VNE2252
	20	Clamper	VNL1924
	21	Screw	JGZ17P028FMC
	22	Screw	Z39-019
	23	Tray	VNL1920

Application of Lubricant

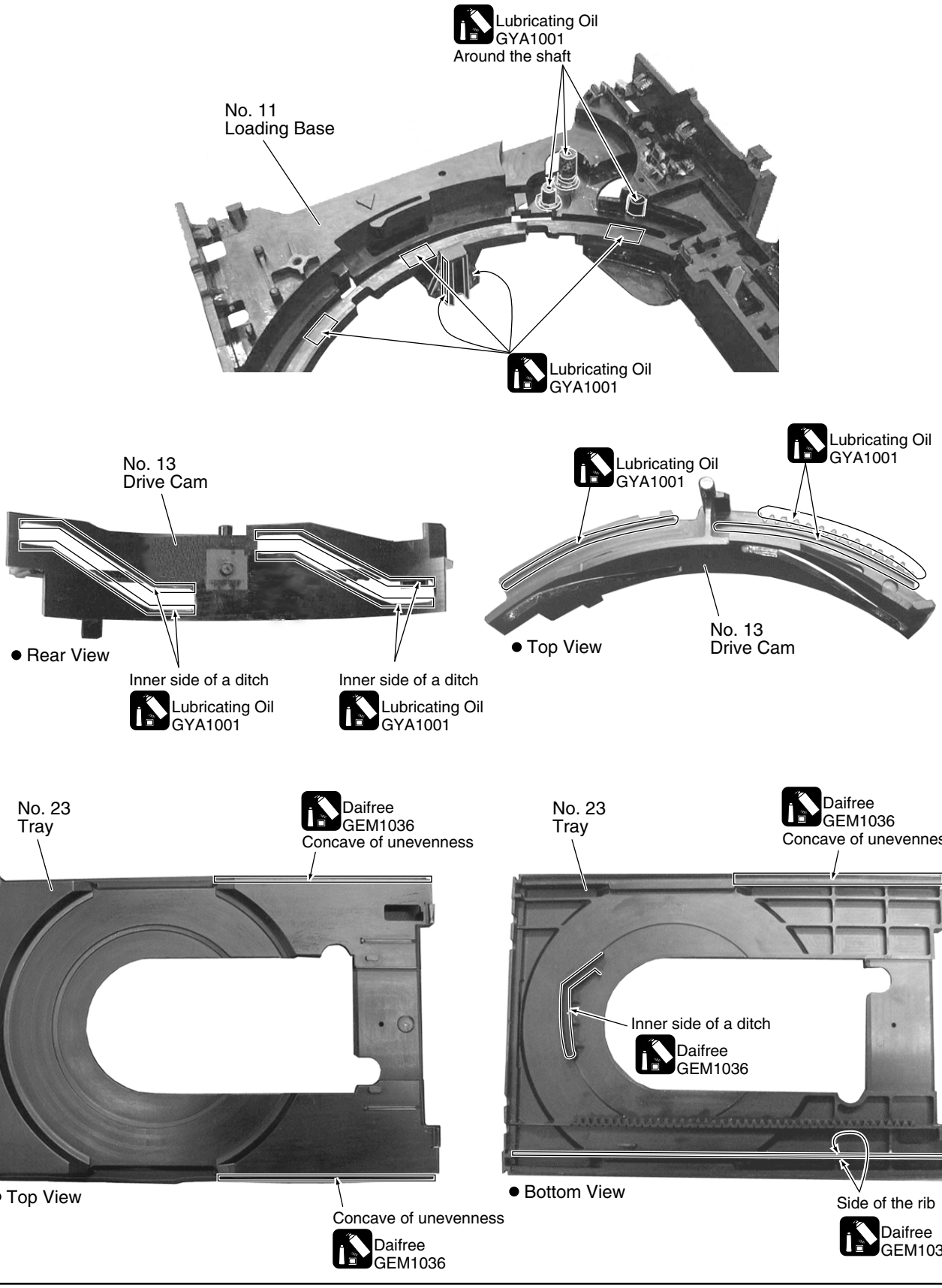

2.5 TRAVERSE MECHANISM ASSY-S

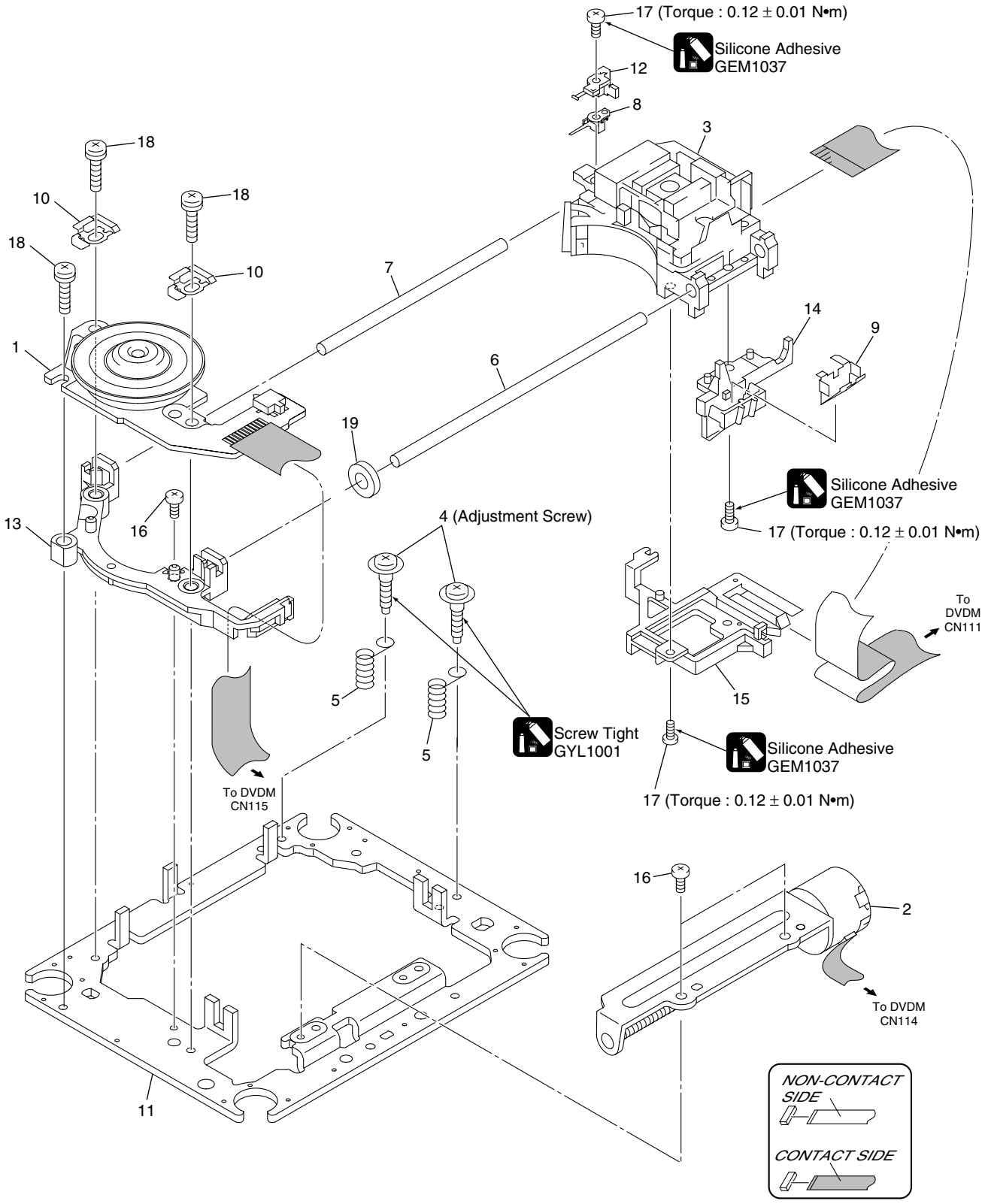

TRAVERSE MECHANISM ASSY-S parts List

Mark	No.	Description	Part No.
	1	Spindle Motor	VXM1088
	2	Stepping Motor	VXM1090
⚠	3	Pickup Assy-S	OXX8003
	4	Skew Screw	VBA1080
	5	Skew Spring	VBH1335
	6	Guide Bar	VLL1514
	7	Sub Guide Bar	VLL1515
	8	Hold Spring	VNC1017
	9	Joint Spring	VNC1019
	10	Support Spring	VNC1020
NSP	11	Mechanism Chassis	VNE2248
	12	Slider	VNL1811
	13	Spacer	VNL1913
	14	Joint	VNL1914
	15	FFC Holder	VNL1915
	16	Screw	BBZ20P050FZK
	17	Tapping Screw	OBA8009
	18	Screw	PMA26P100FMC
	19	Damper Sheet	VEB1335

3. BLOCK DIAGRAM AND SCHEMATIC DIAGRAM

3.1 BLOCK DIAGRAM

■ SIGNAL ROUTE

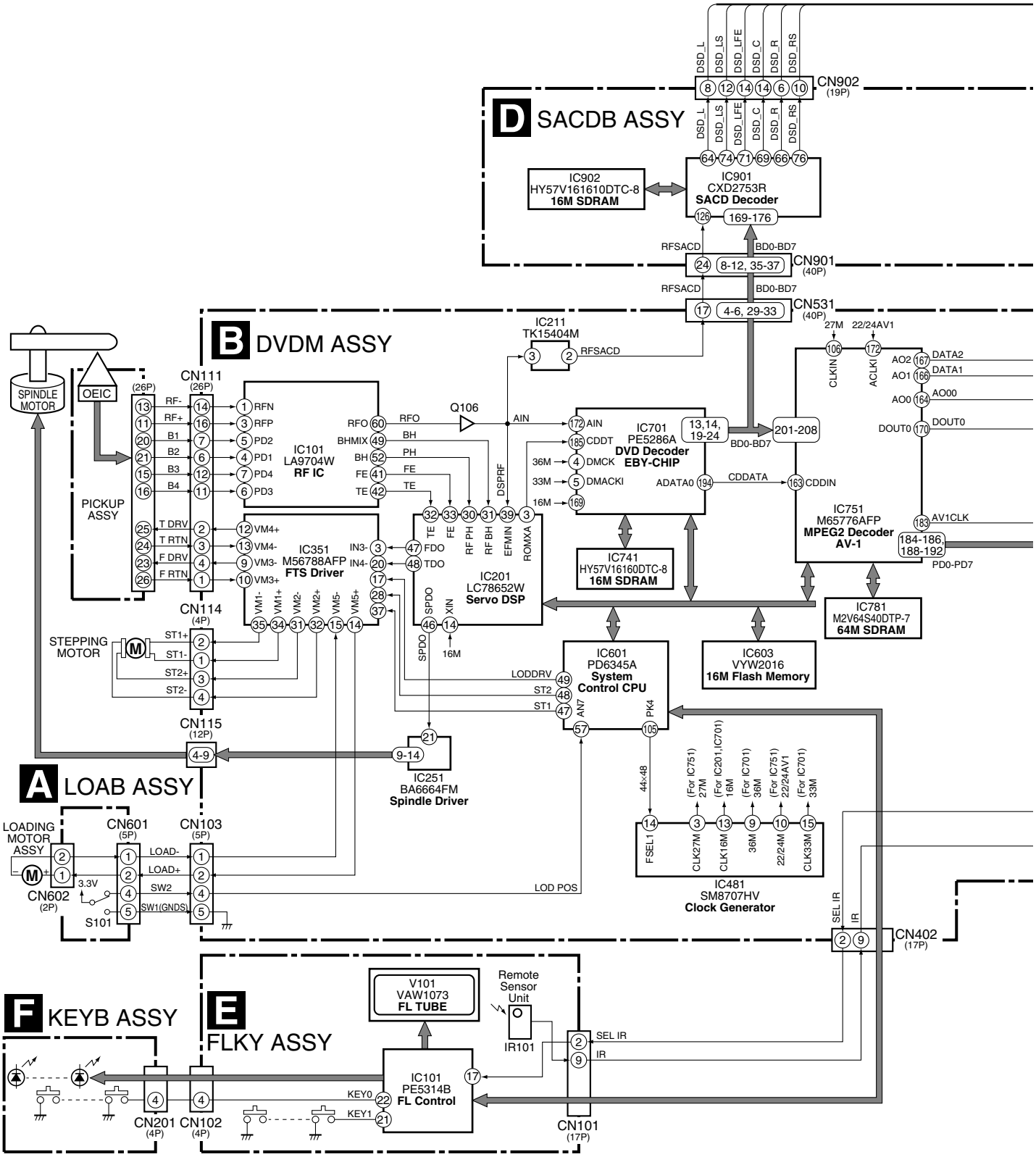

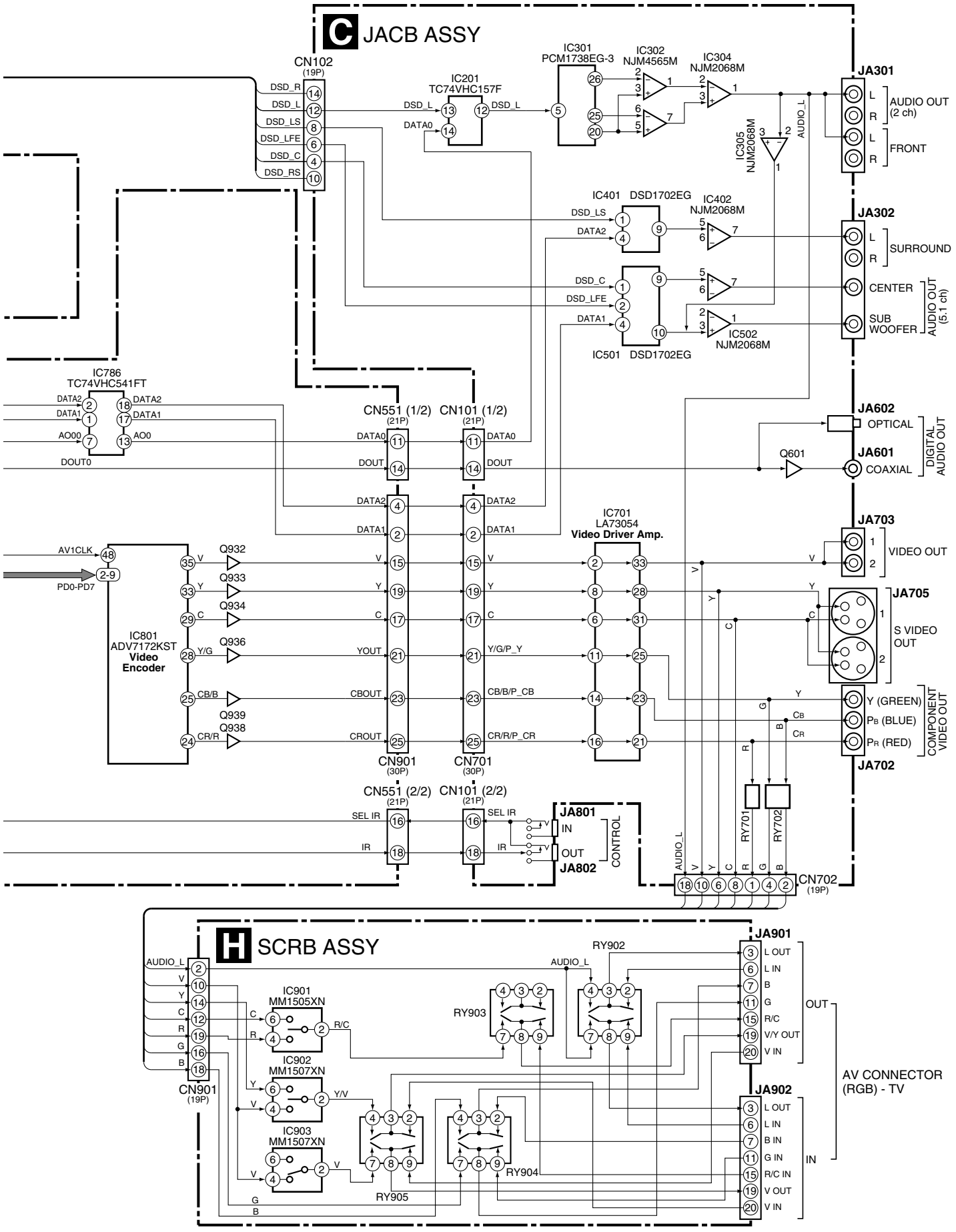
C JACB ASSY
CN102 (19P)
DSD_R
DSD_L
DSD_LS
DSD_LFE
DSD_C
DSD_RS
IC201 TC74VHC157F
DATA0
IC301 PCM1738EG-3
IC302 NJM4565M
IC304 NJM2068M
IC305 NJM2068M
AUDIO_L
JA301
AUDIO OUT (2 ch)
FRONT
IC401 DSD1702EG
IC402 NJM2068M
DATA2
JA302
SURROUND
IC501 DSD1702EG
IC502 NJM2068M
CENTER
SUB WOOFER
AUDIO OUT (5.1 ch)
IC786 TC74VHC541FT
AO00
DOUT0
CN551 (1/2)
CN101 (1/2)
(21P)
JA602
OPTICAL
Q601
JA601
COAXIAL
DIGITAL AUDIO OUT
JA703
VIDEO OUT
AV1CLK
PD0-PD7
IC701 LA73054
Video Driver Amp.
Q932
Q933
Q934
Q936
Q939
Q938
IC801 ADV7172KST
Video Encoder
JA705
S VIDEO OUT
CB/B
CR/R
CBOUT
CROUT
YOUT
CB/B/P_CB
CR/R/P_CR
Y/G/P_Y
Y (GREEN)
PB (BLUE)
PR (RED)
COMPONENT VIDEO OUT
JA702
CN901 (30P)
CN701 (30P)
CN551 (2/2)
CN101 (2/2)
SEL IR
IR
JA801
IN
OUT
JA802
CONTROL
RY701
RY702
CN702 (19P)
H SCRB ASSY
CN901 (19P)
IC901 MM1505XN
IC902 MM1507XN
IC903 MM1507XN
R/C
Y/V
RY902
RY903
RY904
RY905
JA901
L OUT
L IN
B
G
R/C
V/Y OUT
V IN
JA902
B IN
G IN
V OUT
AV CONNECTOR (RGB) - TV

■ POWER SUPPLY BLOCK

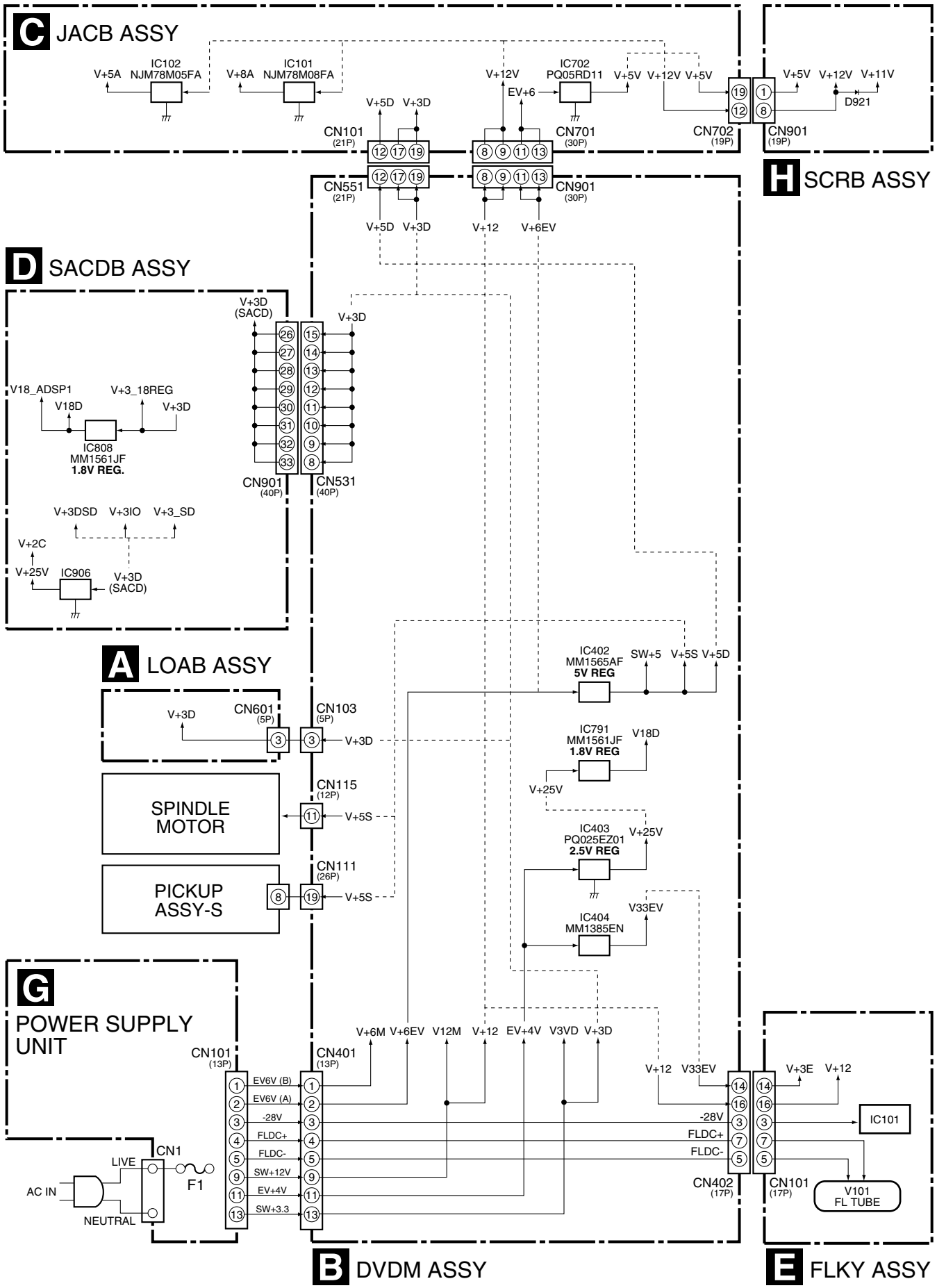

A

B

C

D

E

F

3.2 LOAB ASSY and OVERALL WIRING DIAGRAM

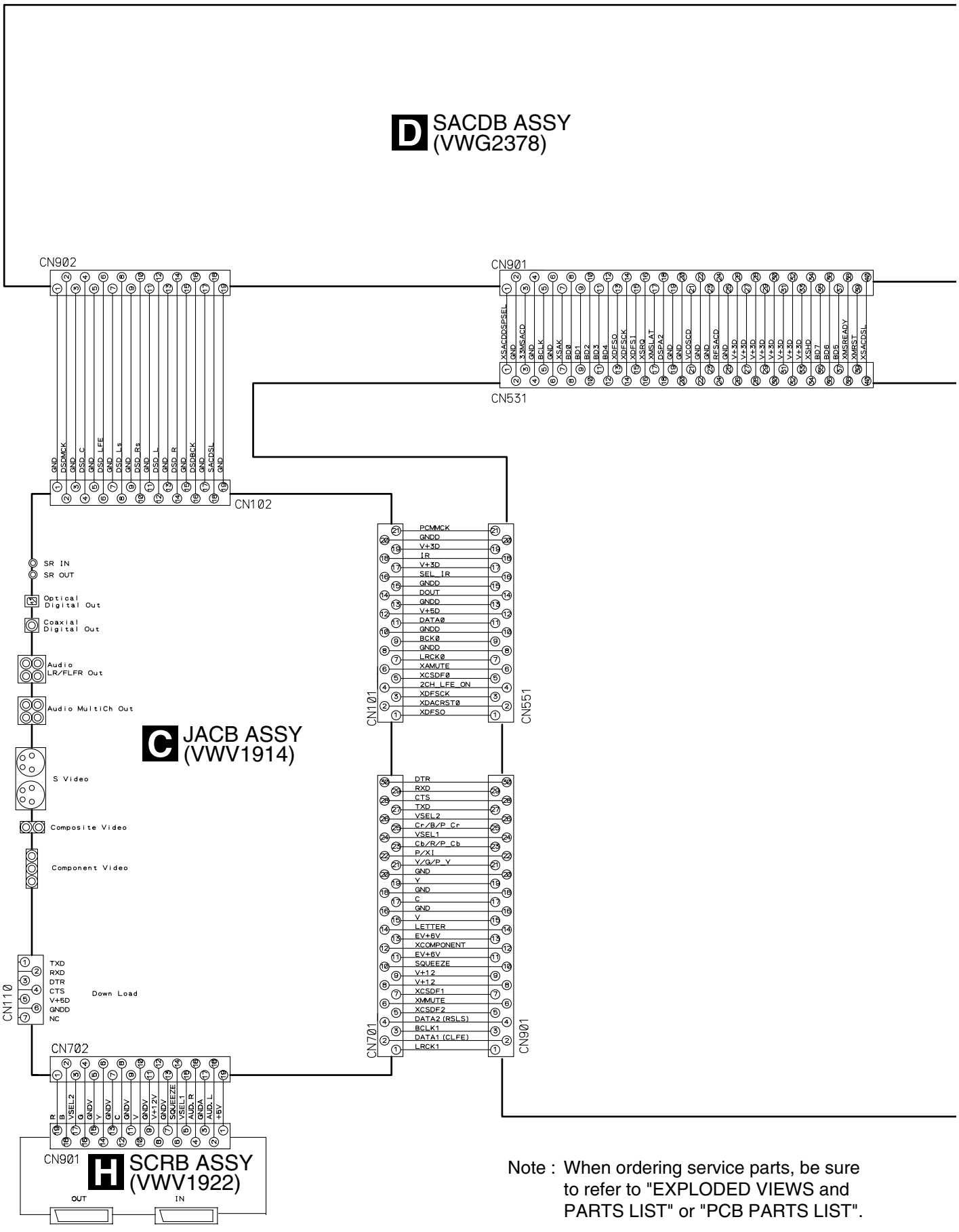

Note : When ordering service parts, be sure to refer to "EXPLODED VIEWS and PARTS LIST" or "PCB PARTS LIST".

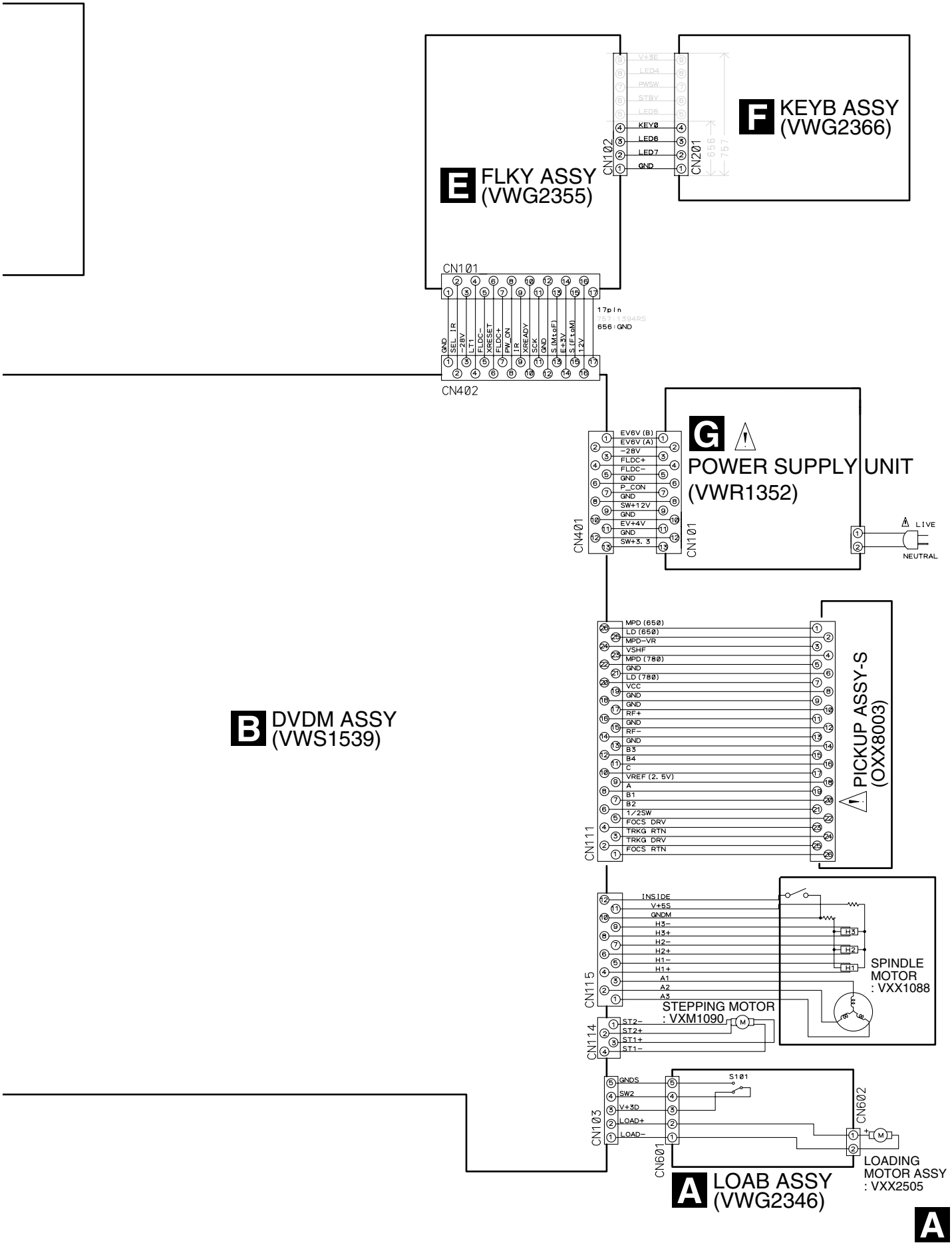
E FLKY ASSY (VWG2355)
F KEYB ASSY (VWG2366)
CN102
CN201
V+3E
LED4
PWSW
STBY
LED5
KEY0
LED6
LED7
GND
656
757
CN101
17pin
757:1394RS
656:GND
GND
SEL_IR
-28V
LT1
FLDC-
XRESET
FLDC+
PW_ON
IR
XREADY
SCK
GND
S(M1oF)
E+5V
S(F1oM)
12V
CN402
G POWER SUPPLY UNIT (VWR1352)
EV6V (B)
EV6V (A)
-28V
FLDC+
FLDC-
GND
P_CON
GND
SW+12V
GND
EV+4V
GND
SW+3.3
CN401
CN101
LIVE
NEUTRAL
B DVDM ASSY (VWS1539)
MPD (650)
LD (650)
MPD-VR
VSHF
MPD (780)
GND
LD (780)
VCC
GND
GND
RF+
GND
RF-
GND
B3
B4
C
VREF (2.5V)
A
B1
B2
1/2SW
FOCS DRV
TRKG RTN
TRKG DRV
FOCS RTN
CN111
PICKUP ASSY-S (OXX8003)
INSIDE
V+5S
GNDM
H3-
H3+
H2-
H2+
H1-
H1+
A1
A2
A3
CN115
SPINDLE MOTOR : VXX1088
STEPPING MOTOR : VXM1090
ST2-
ST2+
ST1+
ST1-
CN114
GNDS
SW2
V+3D
LOAD+
LOAD-
CN103
S101
CN602
CN601
LOADING MOTOR ASSY : VXX2505
A LOAB ASSY (VWG2346)

3.3 DVDM ASSY 1/4 [FTS BLOCK]

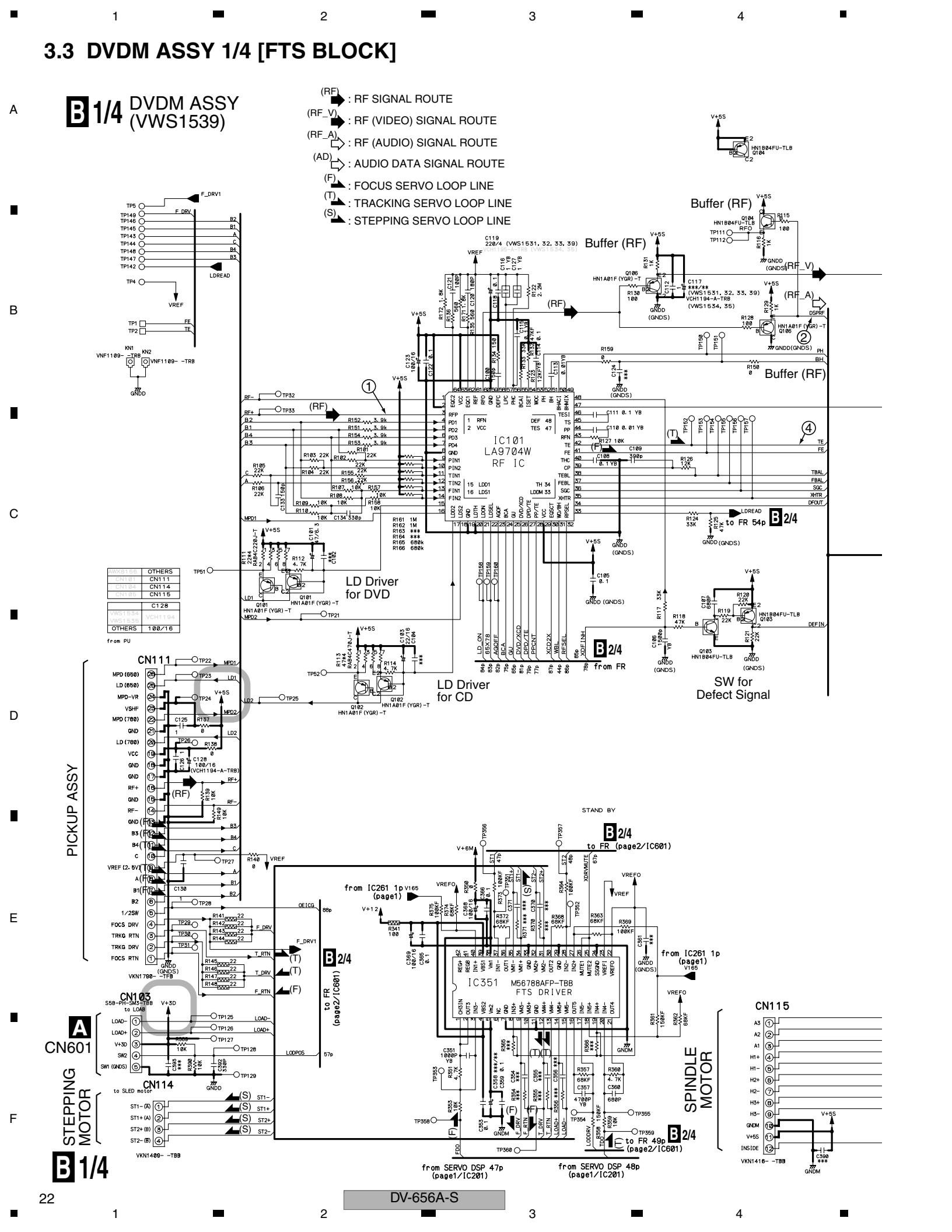

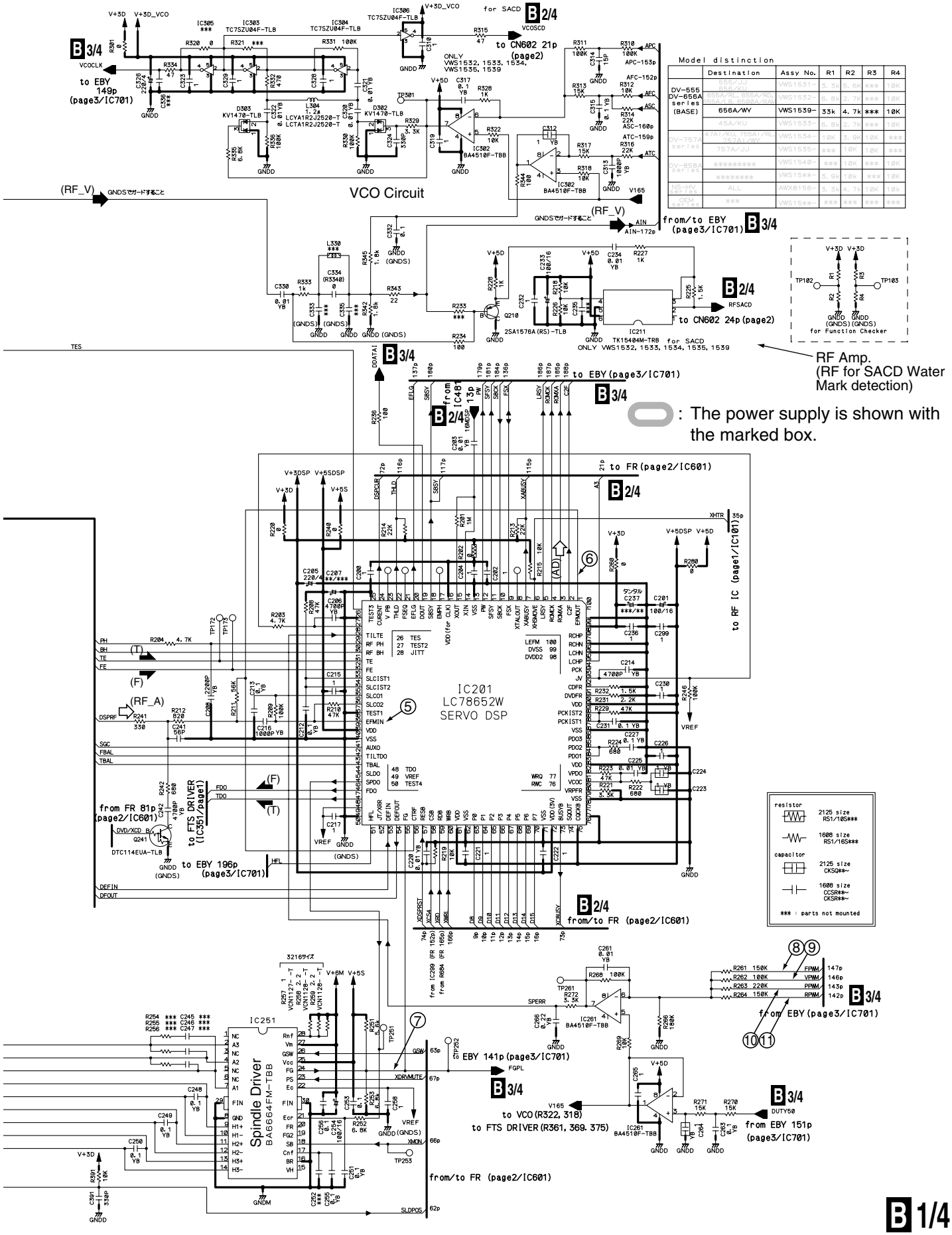

Model distinction

	Destination	Assy No.	R1	R2	R3	R4
DV-555 DV-656A series (BASE)	555/JJ 656/KU	VWS1531-	3. 3k	5. 6K	***	10K
	655A/RL, 655A/RD, 655A/LB, 6500A/RAN	VWS1532-	6. 8k	2. 7K	***	10K
	656A/WY	VWS1539-	33k	4. 7k	***	10K
	45A/KU	VWS1533-	6. 8k	2. 7K	***	10K
DV-757A series	47AI/KU, 755AI/RL, 757AI/WY	VWS1534-	10K	3. 9K	10K	***
	757A/JJ	VWS1535-	***	10K	10K	***
DV-858A series	*********	VWS1540-	***	10K	***	10K
	********	VWS15**-	3. 9k	10k	***	10K
NS-HV series	ALL	AWX8156-	3. 3k	4. 7k	10K	10k
OEM series	***	VWS15**-	***	***	***	***

3.4 DVDM ASSY 2/4 [FR BLOCK]

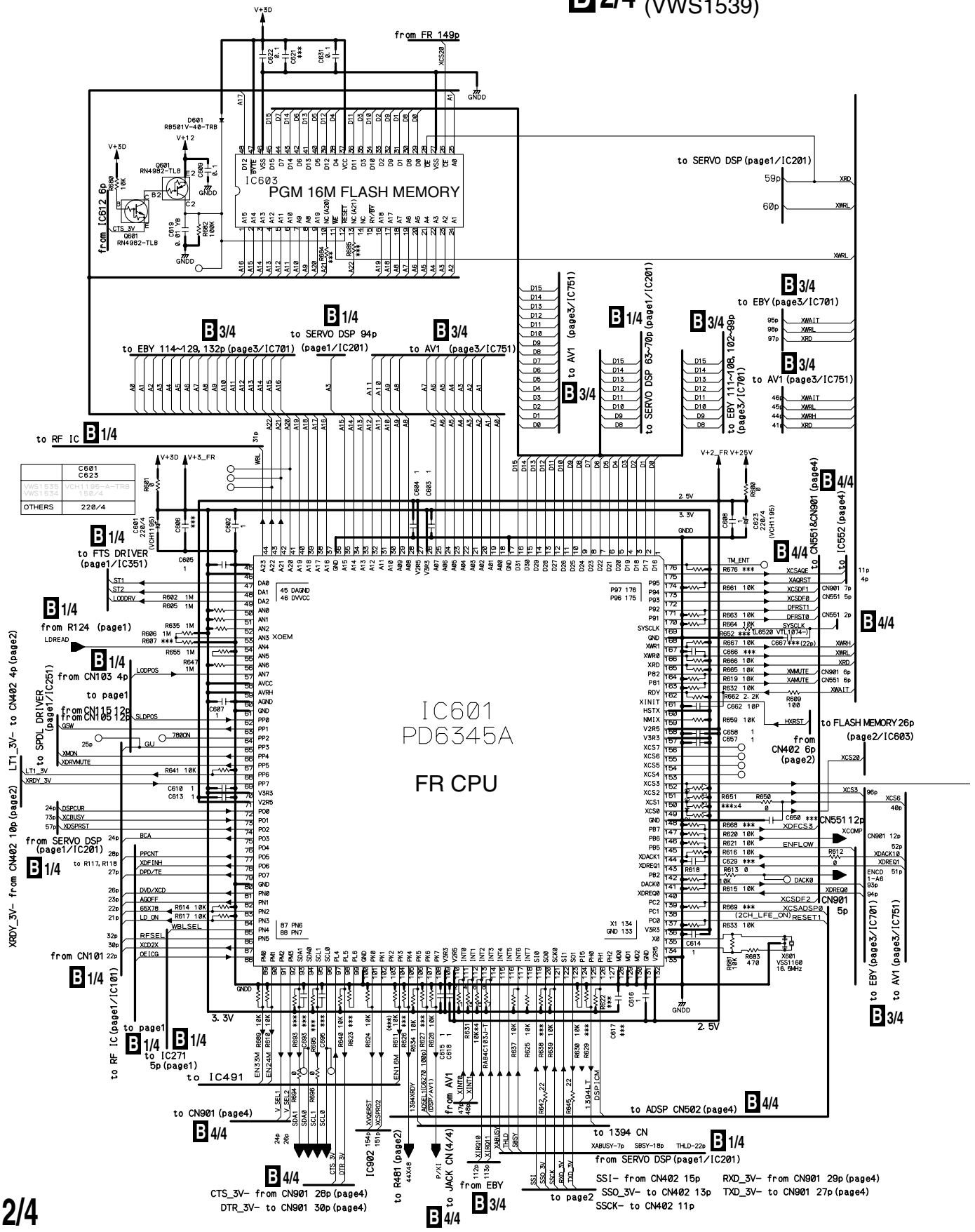

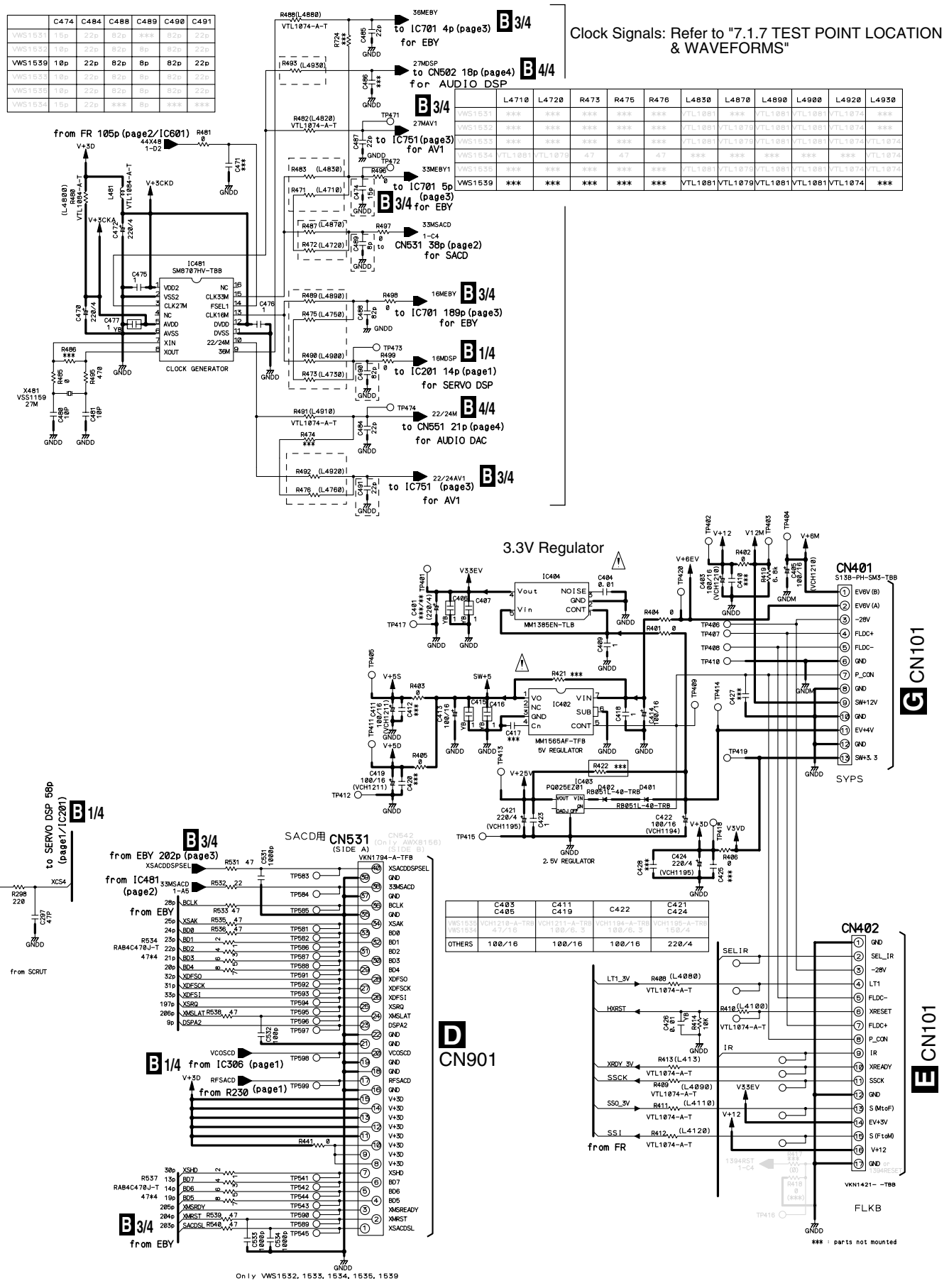

	C474	C484	C488	C489	C490	C491
VWS1531	15p	22p	82p	***	82p	22p
VWS1532	10p	22p	82p	8p	82p	22p
VWS1539	10p	22p	82p	8p	82p	22p
VWS1533	10p	22p	82p	8p	82p	22p
VWS1535	10p	22p	82p	8p	82p	22p
VWS1534	15p	22p	***	8p	***	***

	L4710	L4720	R473	R475	R476	L4830	L4870	L4890	L4900	L4920	L4930
VWS1531	***	***	***	***	***	VTL1081	***	VTL1081	VTL1081	VTL1074	***
VWS1532	***	***	***	***	***	VTL1081	VTL1079	VTL1081	VTL1081	VTL1074	***
VWS1533	***	***	***	***	***	VTL1081	VTL1079	VTL1081	VTL1081	VTL1074	VTL1074
VWS1534	VTL1081	VTL1079	47	47	47	***	***	***	***	***	VTL1074
VWS1535	***	***	***	***	***	VTL1081	VTL1079	VTL1081	VTL1081	VTL1074	VTL1074
VWS1539	***	***	***	***	***	VTL1081	VTL1079	VTL1081	VTL1081	VTL1074	***

	C403 C405	C411 C419	C422	C421 C424
VWS1532 VWS1534	VCH1210A-TRG 47/16	VCH1210A-TRB 100/6.3	VCH1194-A-TRB 100/6.3	VCH1195-A-TRB 150/4
OTHERS	100/16	100/16	100/16	220/4

3.5 DVDM ASSY 3/4 [EBY/AV1 BLOCK]

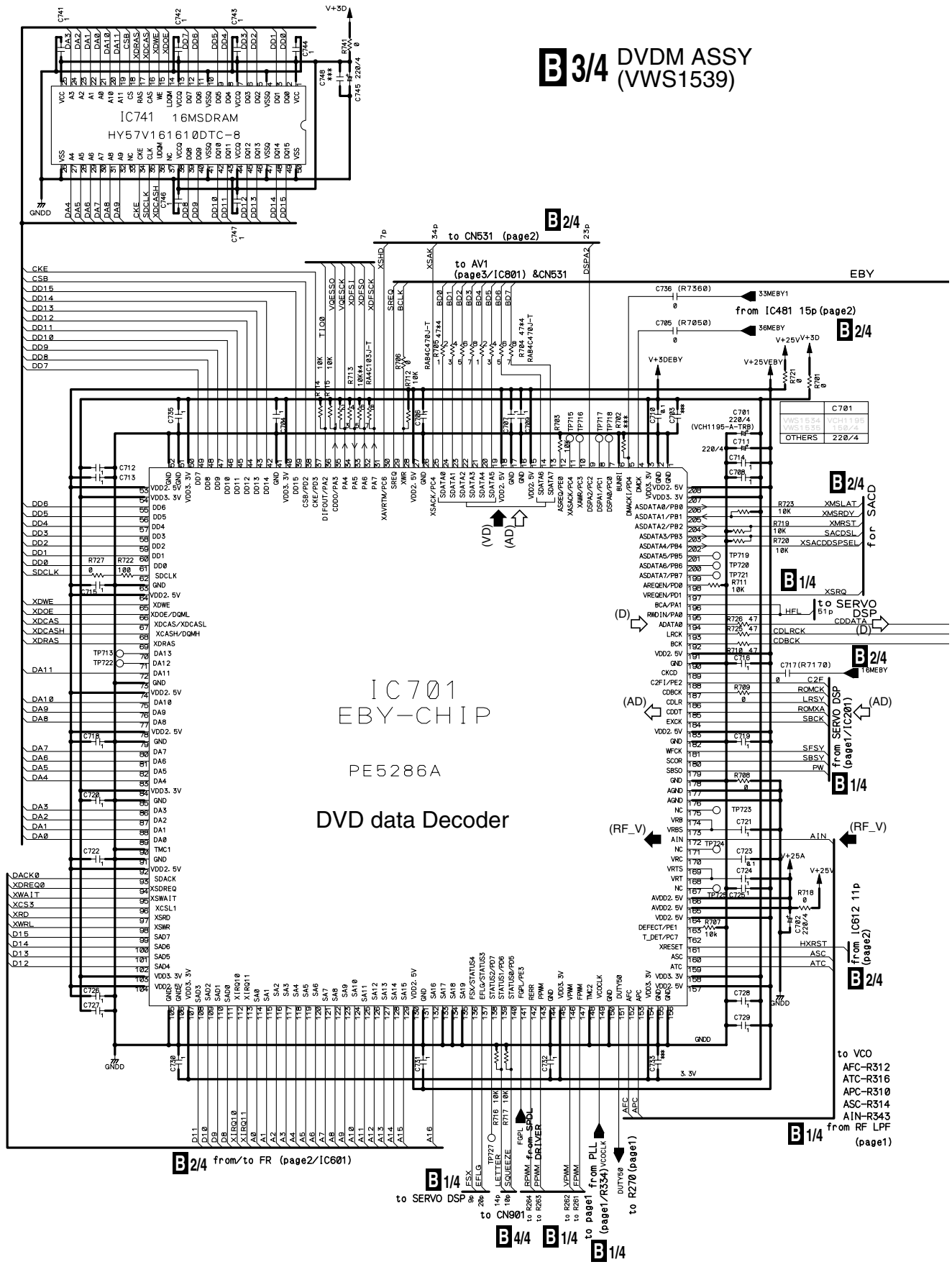

: The power supply is shown with the marked box.

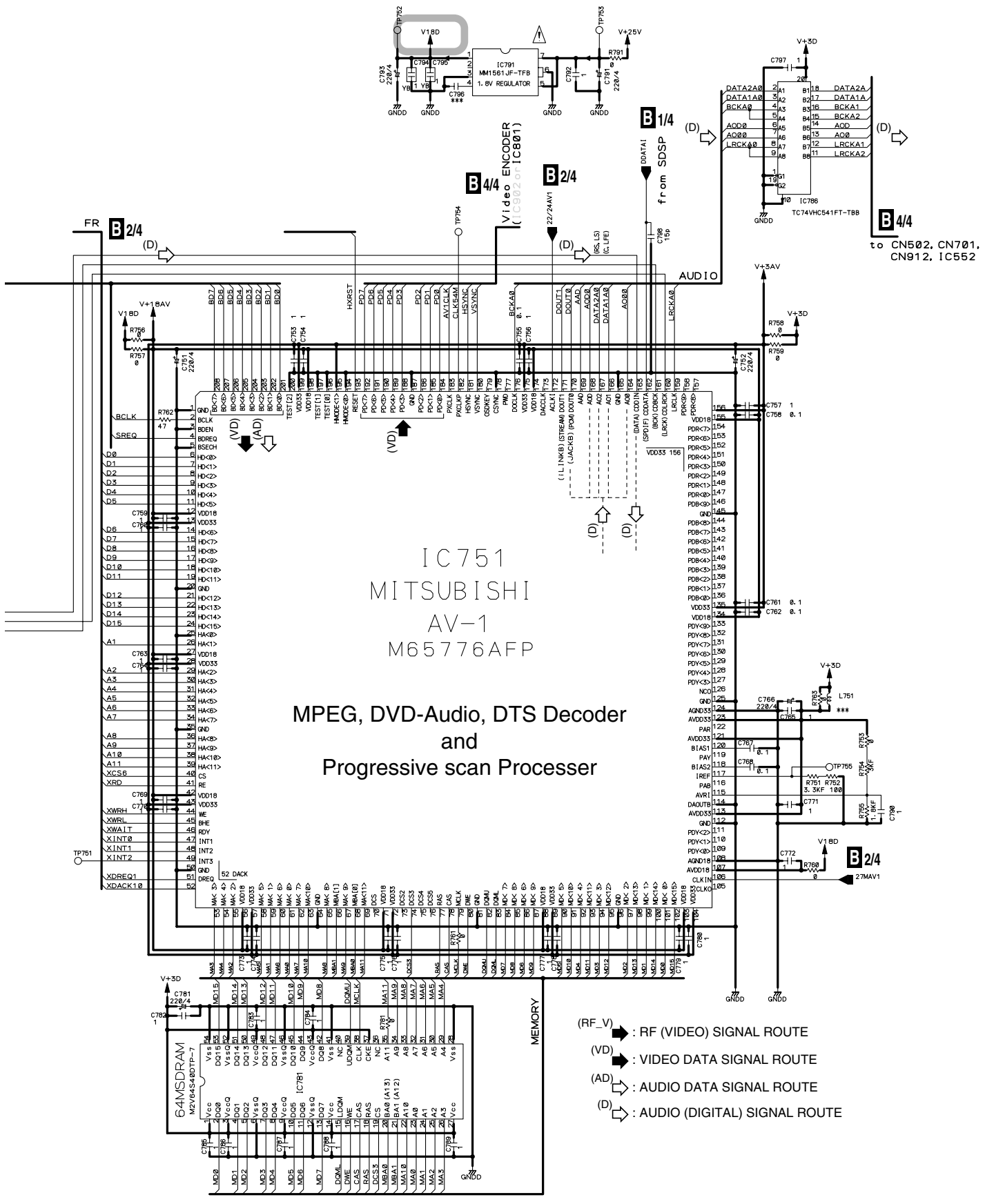

3.6 DVDM ASSY 4/4 [VENC BLOCK]

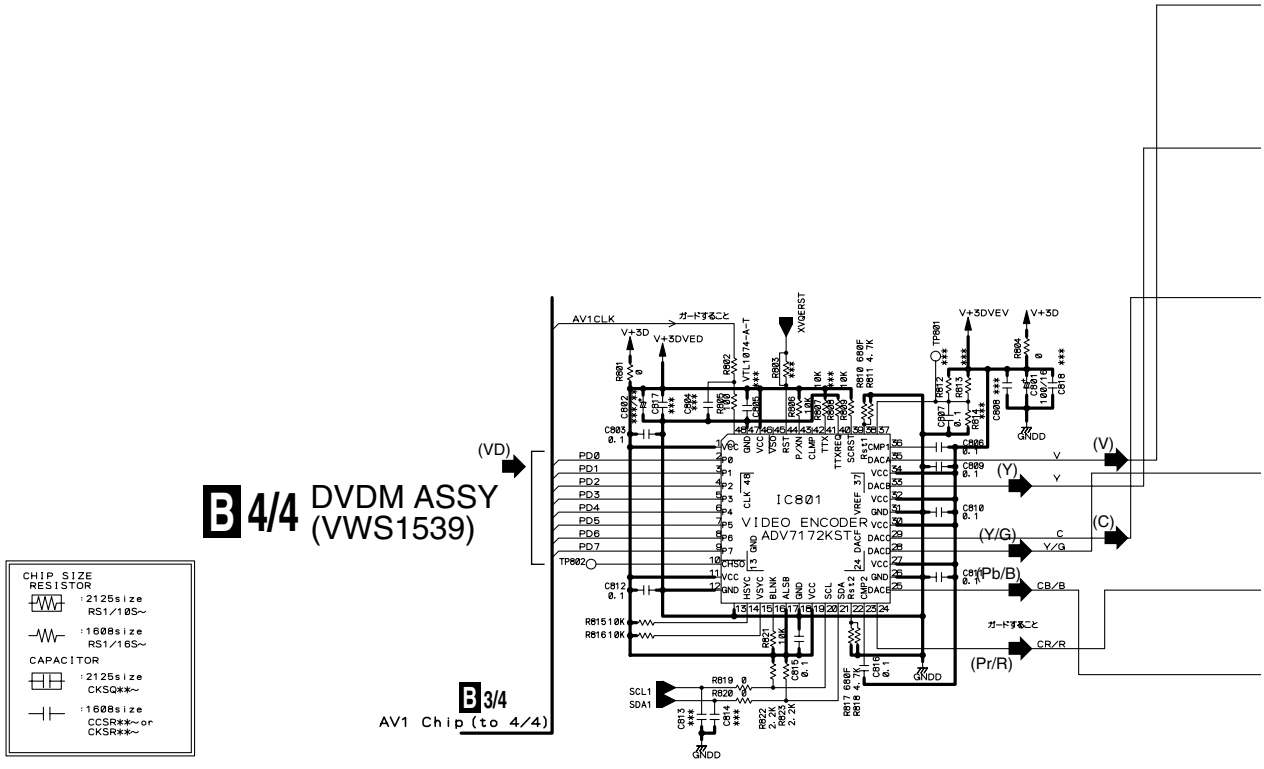

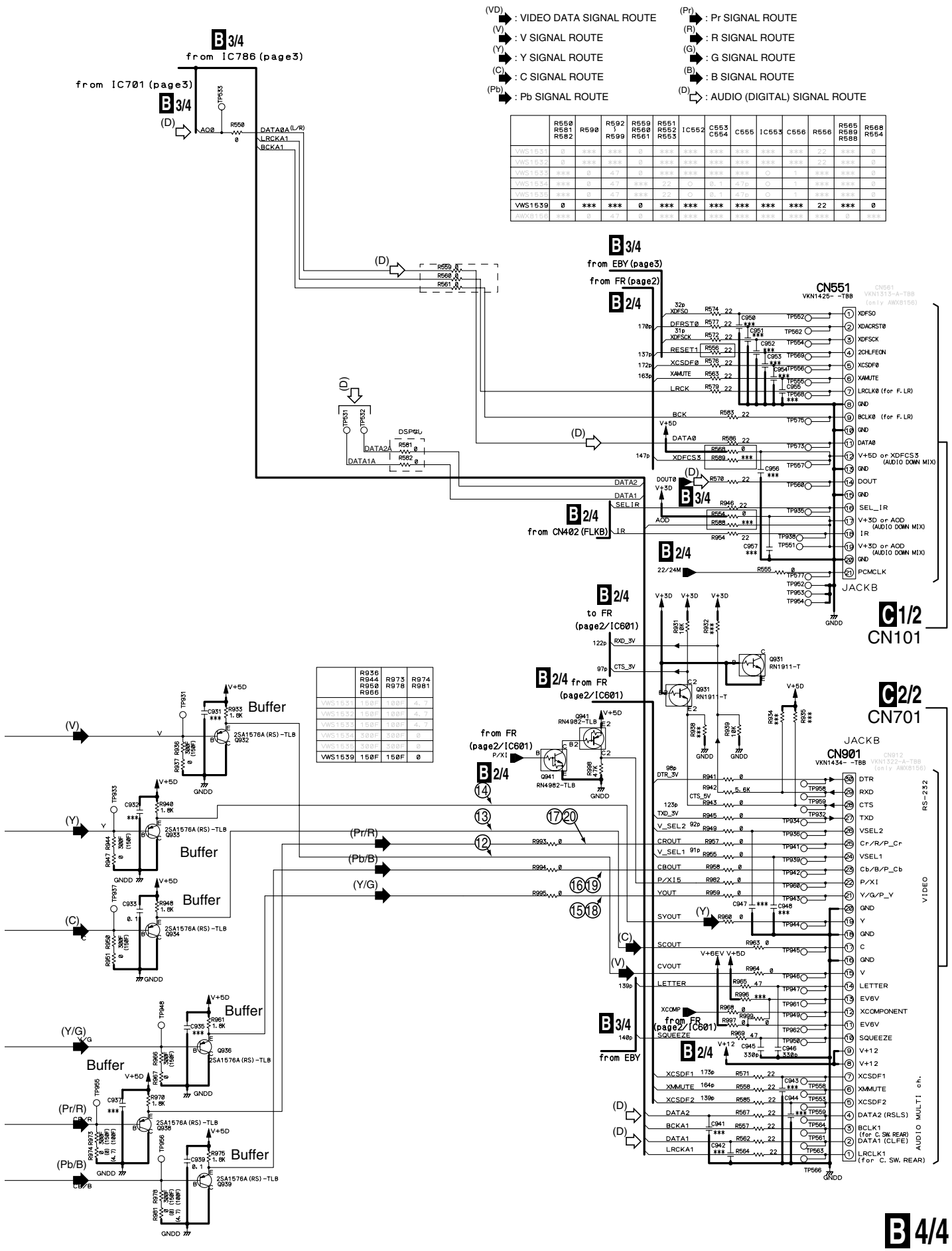

	R550 R581 R582	R590	R592) R599	R559 R560 R561	R551 R552 R553	IC552	C553 C554	C555	IC553	C556	R556	R565 R589 R588	R568 R554
VWS1531	0	***	***	0	***	***	***	***	***	***	22	***	0
VWS1532	0	***	***	0	***	***	***	***	***	***	22	***	0
VWS1533	***	0	47	0	***	***	***	***	O	1	***	***	0
VWS1534	***	0	47	***	22	O	0.1	47p	O	1	***	***	0
VWS1535	***	0	47	***	22	O	0.1	47p	O	1	***	***	0
VWS1539	0	***	***	0	***	***	***	***	***	***	22	***	0
AWX8156	***	0	47	0	***	***	***	***	***	***	***	0	***

	R936 R944 R950 R966	R973 R978	R974 R981
VWS1531	150F	100F	4.7
VWS1532	150F	100F	4.7
VWS1533	150F	100F	4.7
VWS1534	300F	300F	0
VWS1535	300F	300F	0
VWS1539	150F	150F	0

3.7 JACB ASSY 1/2 [AUDIO BLOCK]

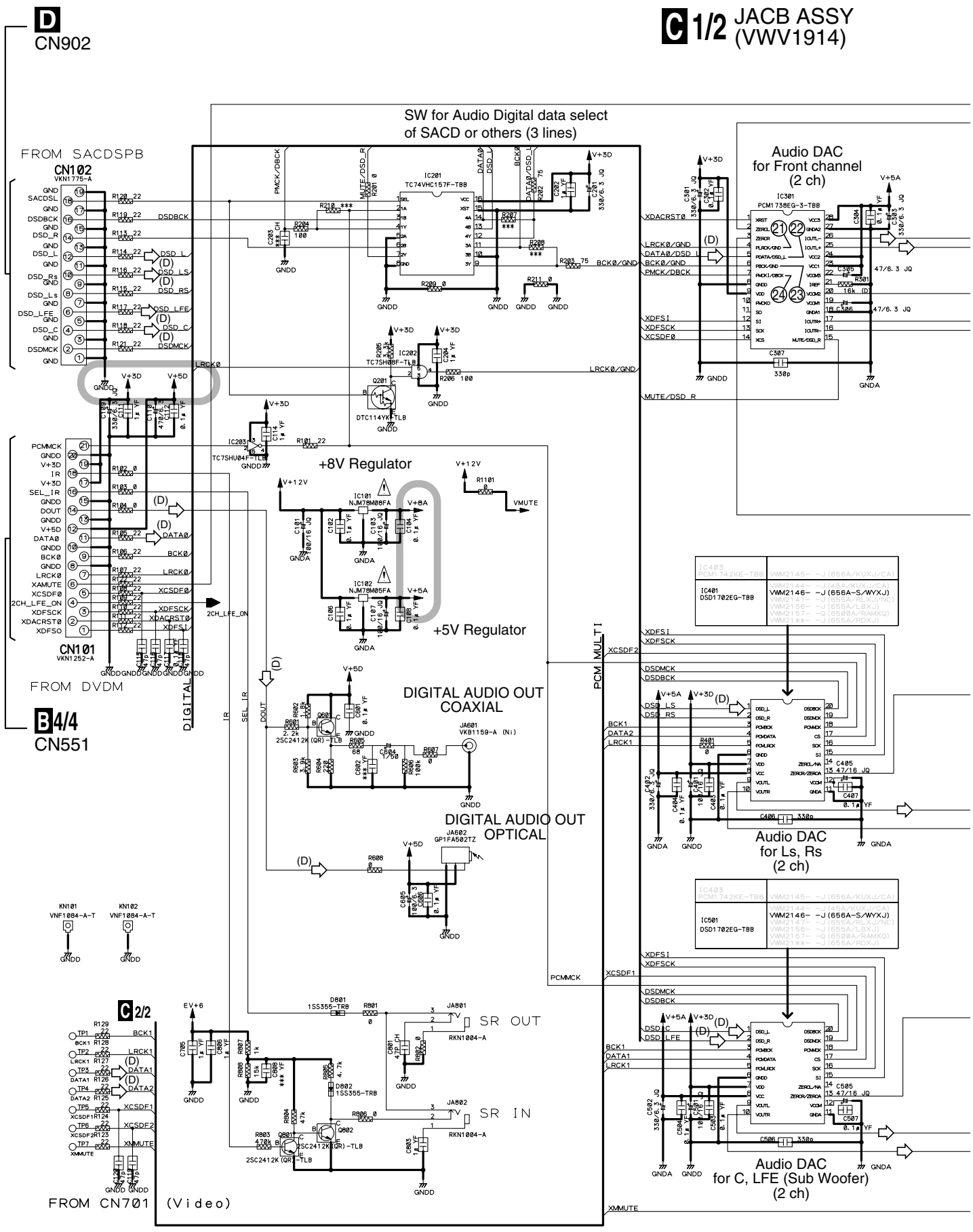

(D) ⇨ : AUDIO (DIGITAL) SIGNAL ROUTE

⇨ : AUDIO SIGNAL ROUTE

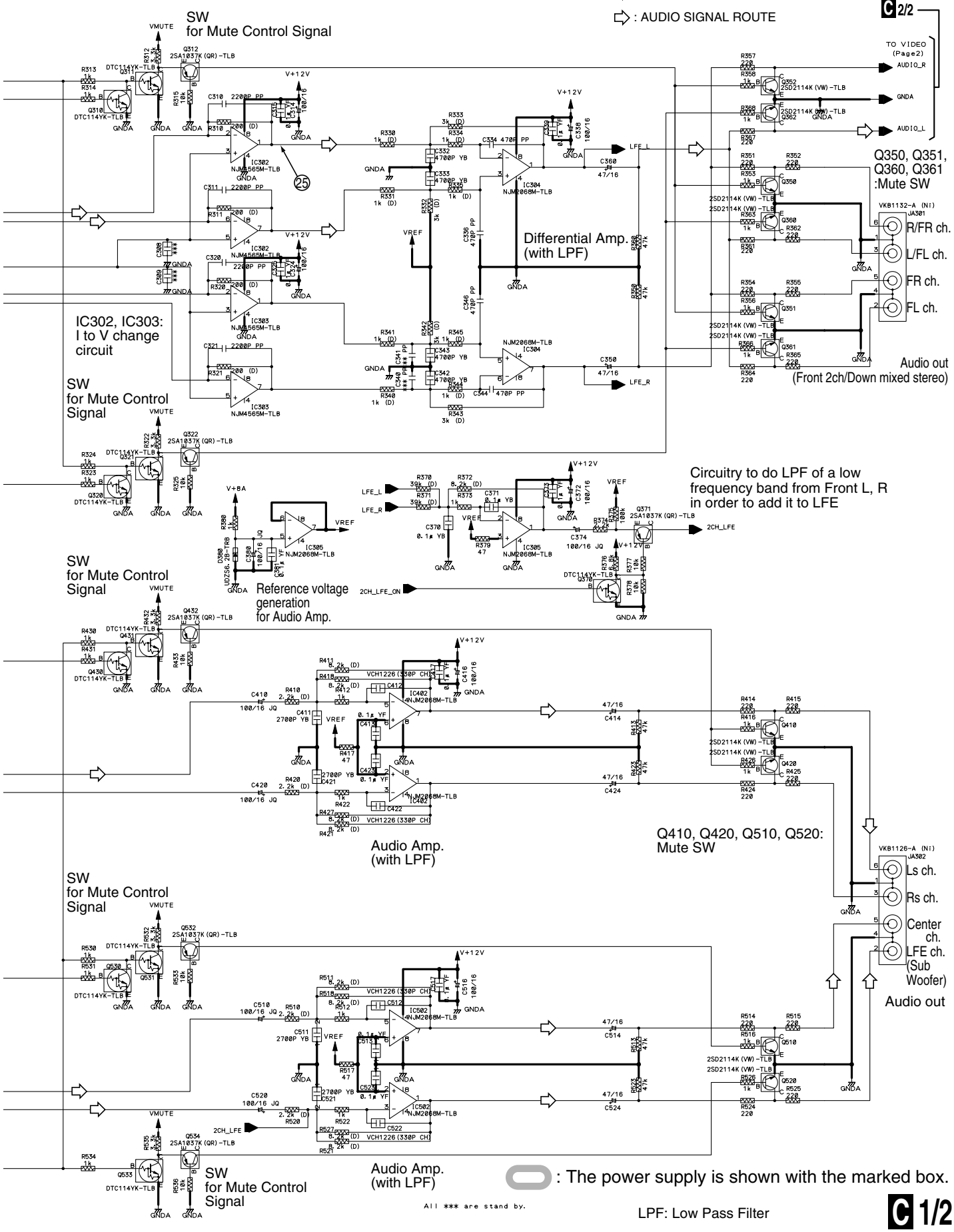

3.8 JACB ASSY 2/2 [VIDEO BLOCK]

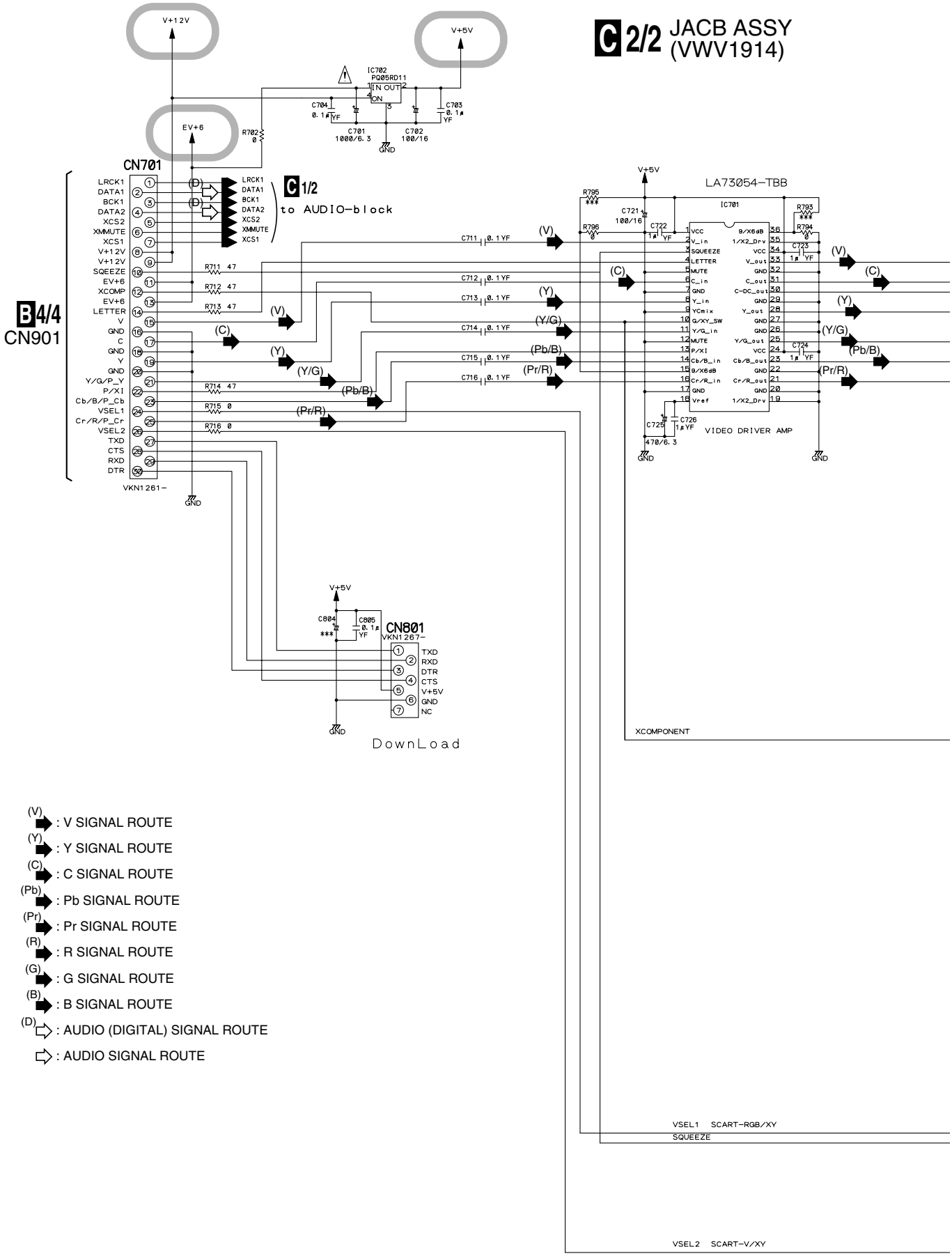

(V) : V SIGNAL ROUTE

(Y) : Y SIGNAL ROUTE

(C) : C SIGNAL ROUTE

(Pb) : Pb SIGNAL ROUTE

(Pr) : Pr SIGNAL ROUTE

(R) : R SIGNAL ROUTE

(G) : G SIGNAL ROUTE

(B) : B SIGNAL ROUTE

(D) : AUDIO (DIGITAL) SIGNAL ROUTE

: AUDIO SIGNAL ROUTE

C 2/2

: The power supply is shown with the marked box.

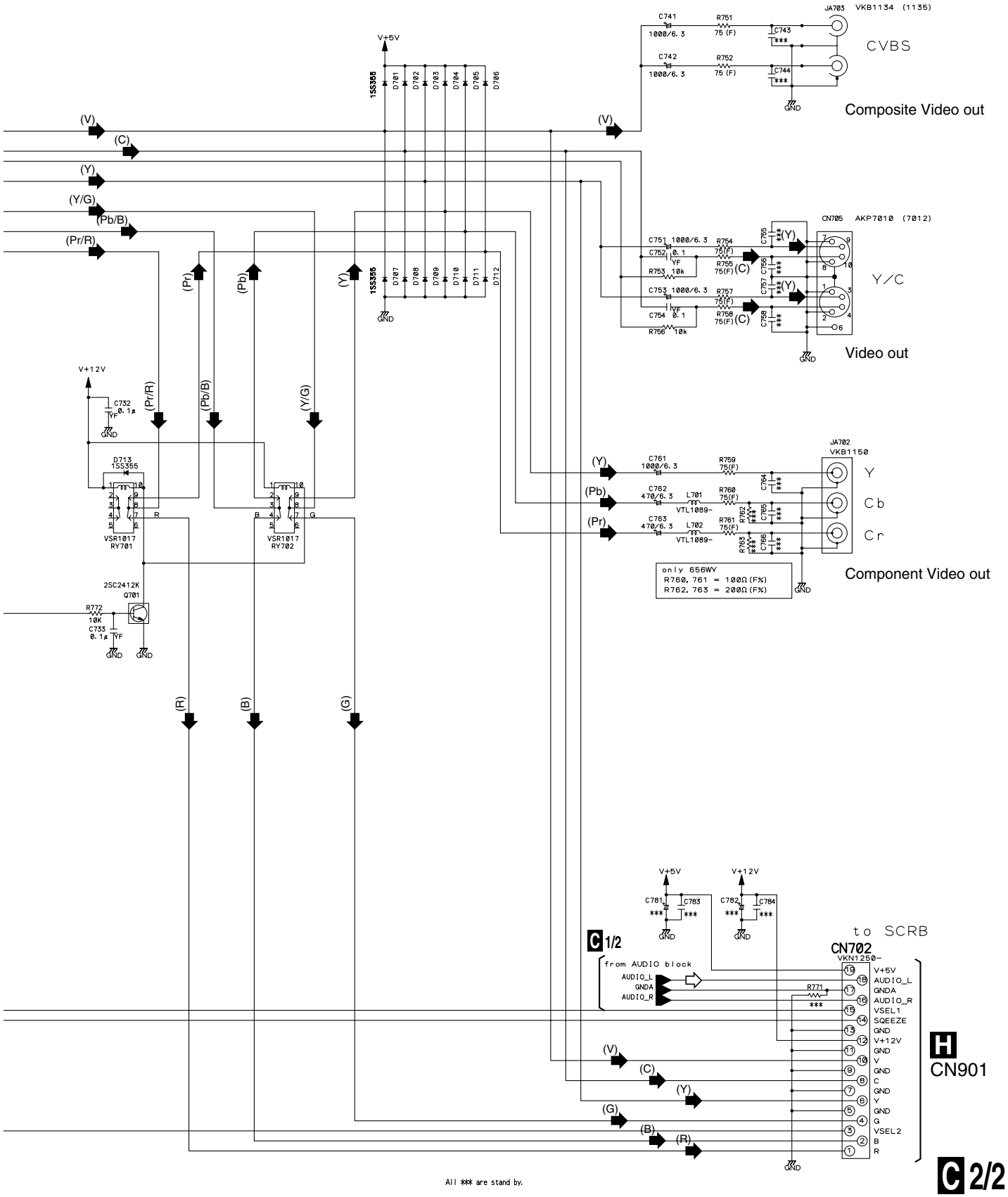

All *** are stand by.

3.9 SACDB ASSY

D SACDB ASSY (VWG2378)

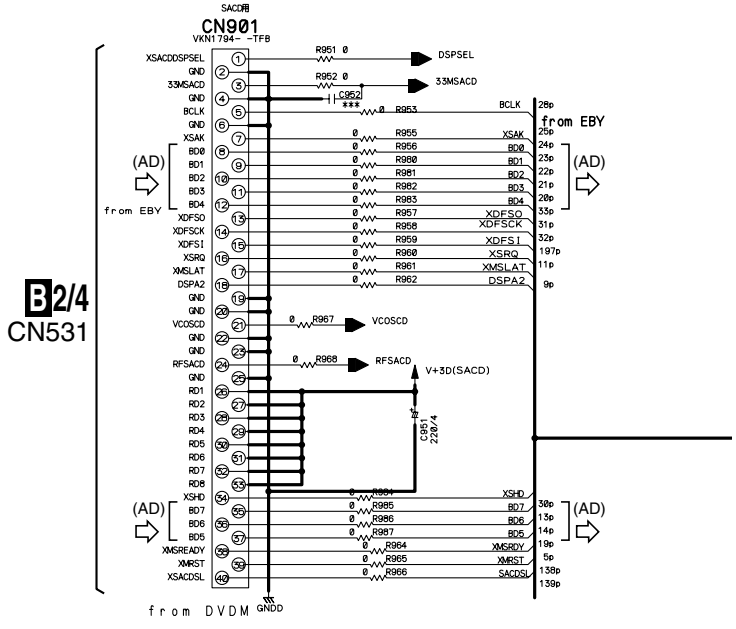

: The power supply is shown with the marked box.

(AD) : AUDIO DATA SIGNAL ROUTE

(D) : AUDIO (DIGITAL) SIGNAL ROUTE

Note
1608
1608

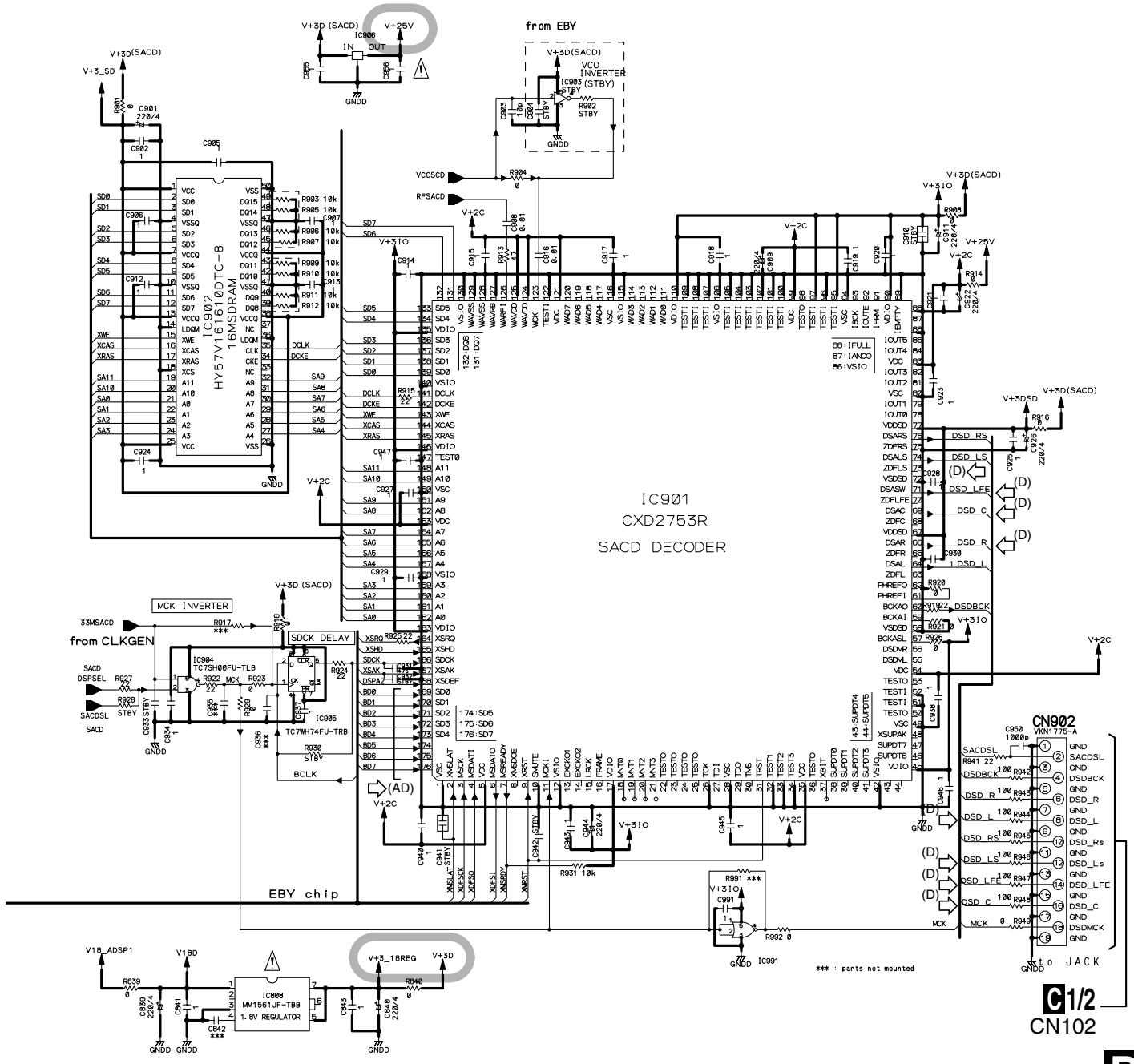

3.10 FLKY and KEYB ASSYS

			DV-656A						DV-757Ai				DV-858Avi				
仕向け			DV-45A /K_ELITE	DV-656A /KU	DV-656A /WY	DV-656A /RL	DV-655A /LB	DV-6500A /RAM	DV-757A /J	DV-755Ai /RL	DV-757Ai /WY	DV-47Ai /K_ELITE	DV-858Avi /J	DV-858Avi /RL	DV-858Avi /WY	DV-49Avi /K_ELITE	
			FLKB VWG2354 VWG2377	VWM2143 VWG2376 VWG2377	VWM2133 VWG2355 VWG2366	VWM2134 VWG2356 VWG2377	VWM2158 VWG2392 VWG2377	VWM2159 VWG2393 VWG2377	VWM2137 VWG2359 VWG2368	VWM2138 VWG2360 VWG2369	VWM2136 VWG2358 VWG2369	VWM2135 VWG2357 VWG2368	VWM2141 VWG2363 VWG2374	VWM2142 VWG2364 VWG2375	VWM2140 VWG2362 VWG2373	VWM2139 VWG2361 VWG2372	
MS1	R0	R127	10K	6.8K	4.7K	2.7K	1.2K	33K	0	2.7K	4.7K	10K	0	2.7K	4.7K	10K	L
	R1	R126	3.9K	33K	3.3K	6.8K	1.5K	6.8K	–	6.8K	3.3K	3.9K	–	6.8K	3.3K	3.9K	H
MS0_0	R2	R109	0	0	–	–	–	–	–	0	0	0	0	0	0	0	L
	R3	R102	–	–	0	0	0	0	0	–	–	–	–	–	–	–	H
MS0_1	R4	R110	0	–	0	–	–	–	0	0	0	0	0	0	0	0	L
	R5	R103	–	0	–	0	0	0	–	–	–	–	–	–	–	–	H
MS0_2	R6	R111	0	0	0	0	0	0	–	–	–	–	0	0	0	0	L
	R7	R104	–	–	–	–	–	–	0	0	0	0	–	–	–	–	H

E FLKY ASSY (VWG2355)

#33 OEM/not OEM

H	R108 0	OEM
L	R113 0	Pioneer

機種設定

仕向設定

for 858AVi LED

IC101 PE5314B

FL CONTROL MICROCOMPUTER

DV-656 VAW1073

蛍光表示管

KEYポート定数	レベル	定数
10kΩpull up	0	0
	1	1.2k
	2	2.2k
	3	2.7k
	4	3.9k
	5	6.8k
	6	12k
	7	39k

＊＊＊：Standby

: The power supply is shown with the marked box.

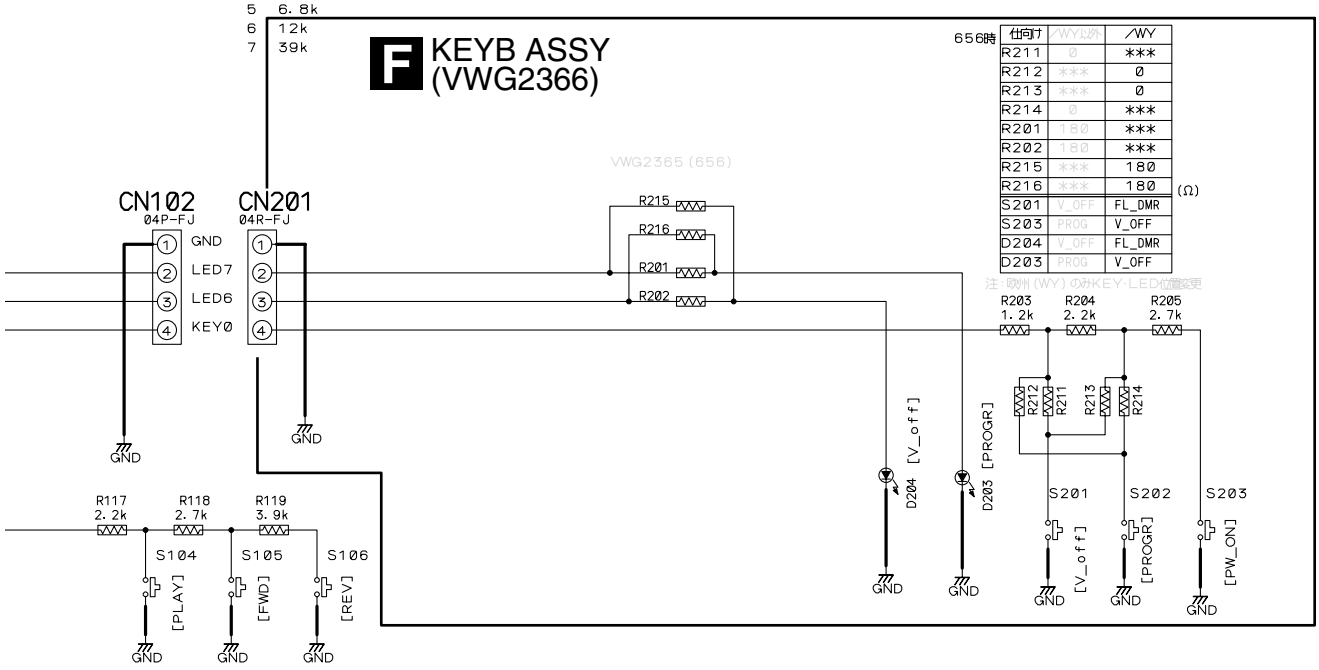

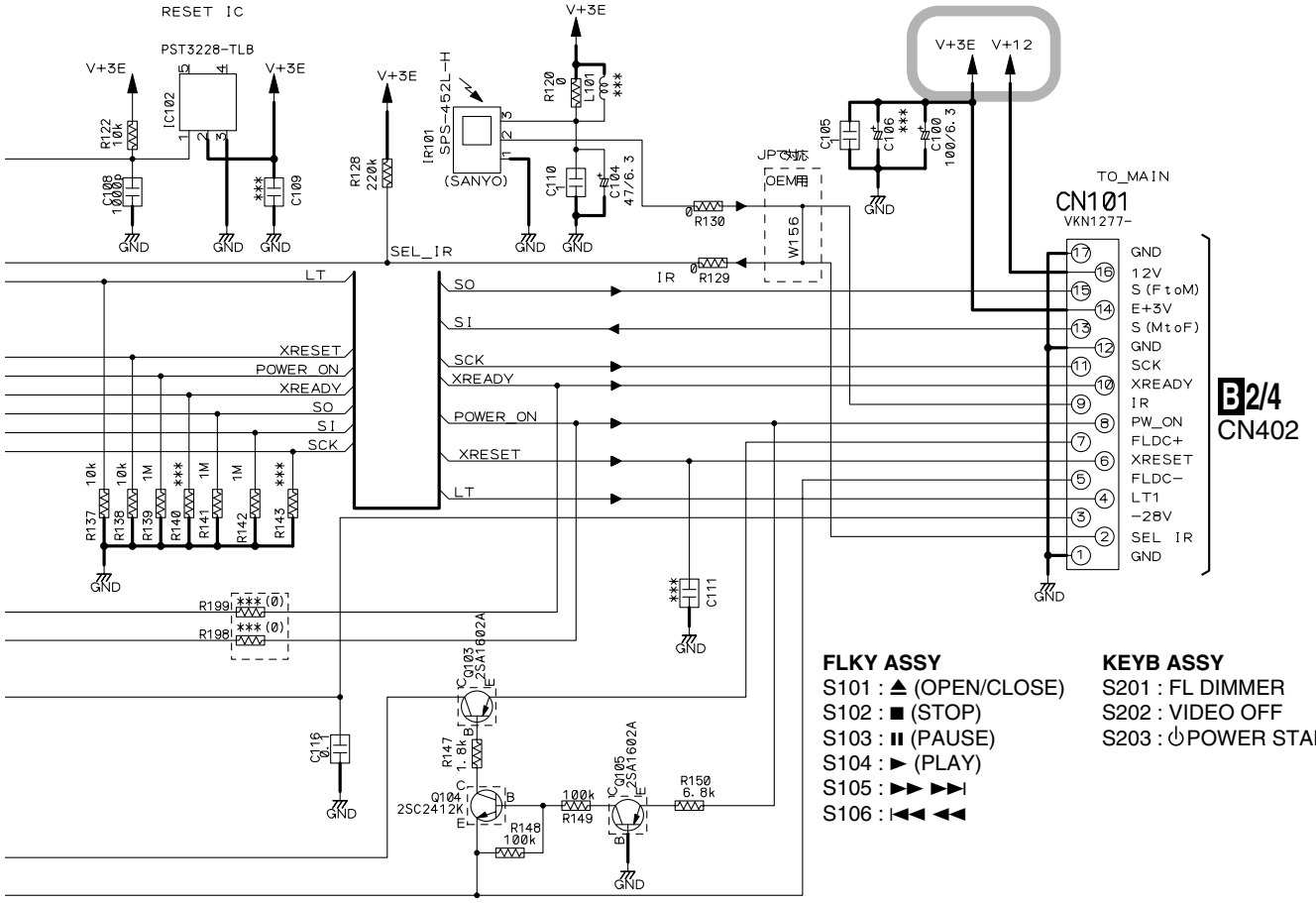

FLKY ASSY
S101 : ⏏ (OPEN/CLOSE)
S102 : ■ (STOP)
S103 : ⏸ (PAUSE)
S104 : ▶ (PLAY)
S105 : ▶▶ ▶|
S106 : |◀◀ ◀◀

KEYB ASSY
S201 : FL DIMMER
S202 : VIDEO OFF
S203 : ⏻POWER STANDBY/ON

E F

3.11 SCRB ASSY

H SCRB ASSY (VWV1922)

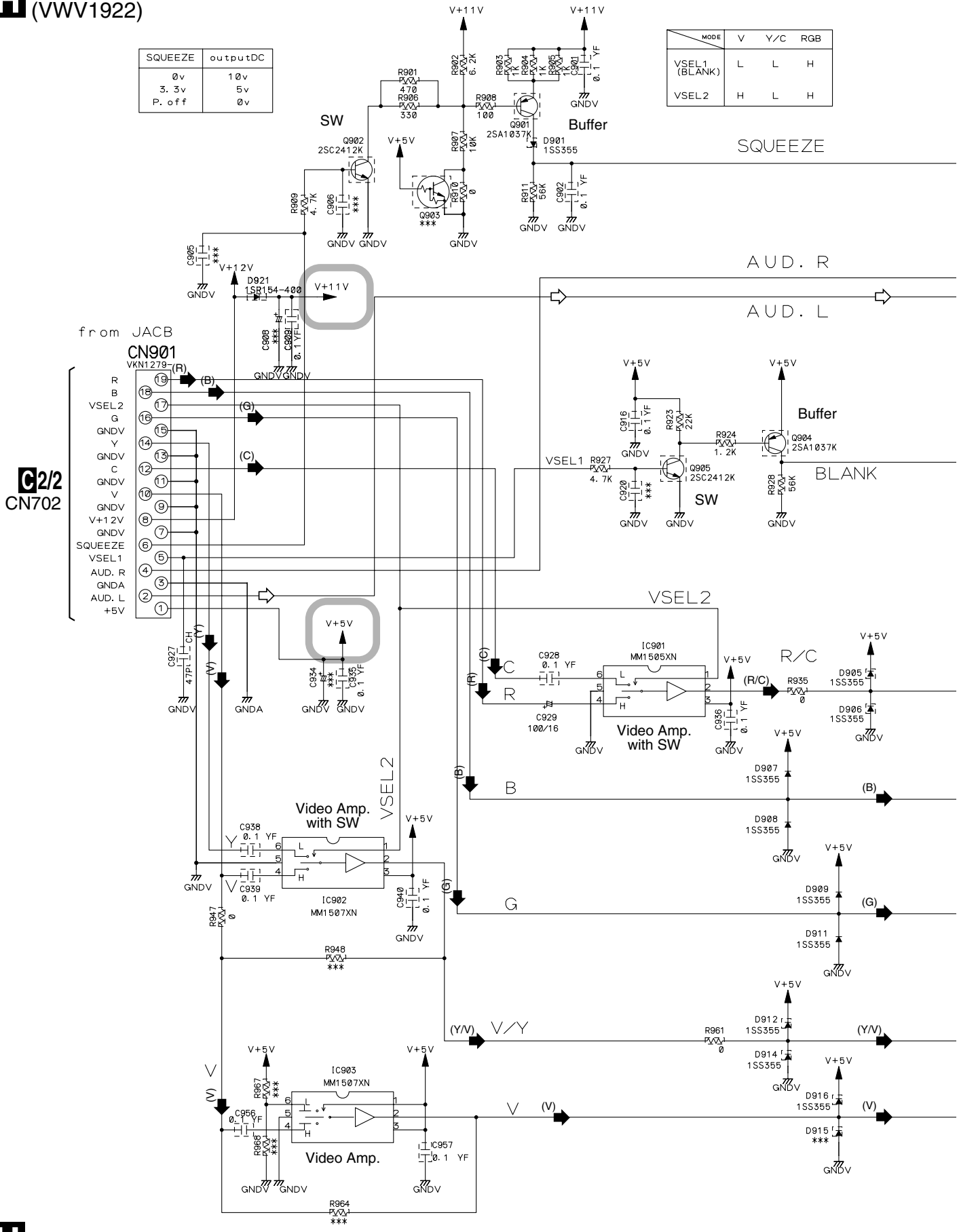

(V) : V SIGNAL ROUTE
(Y) : Y SIGNAL ROUTE
(C) : C SIGNAL ROUTE
: AUDIO SIGNAL ROUTE
(Y/V) : Y/V SIGNAL ROUTE
(R/C) : R/C SIGNAL ROUTE
(R) : R SIGNAL ROUTE
(G) : G SIGNAL ROUTE
(B) : B SIGNAL ROUTE

RY901-RY905: Relay SW

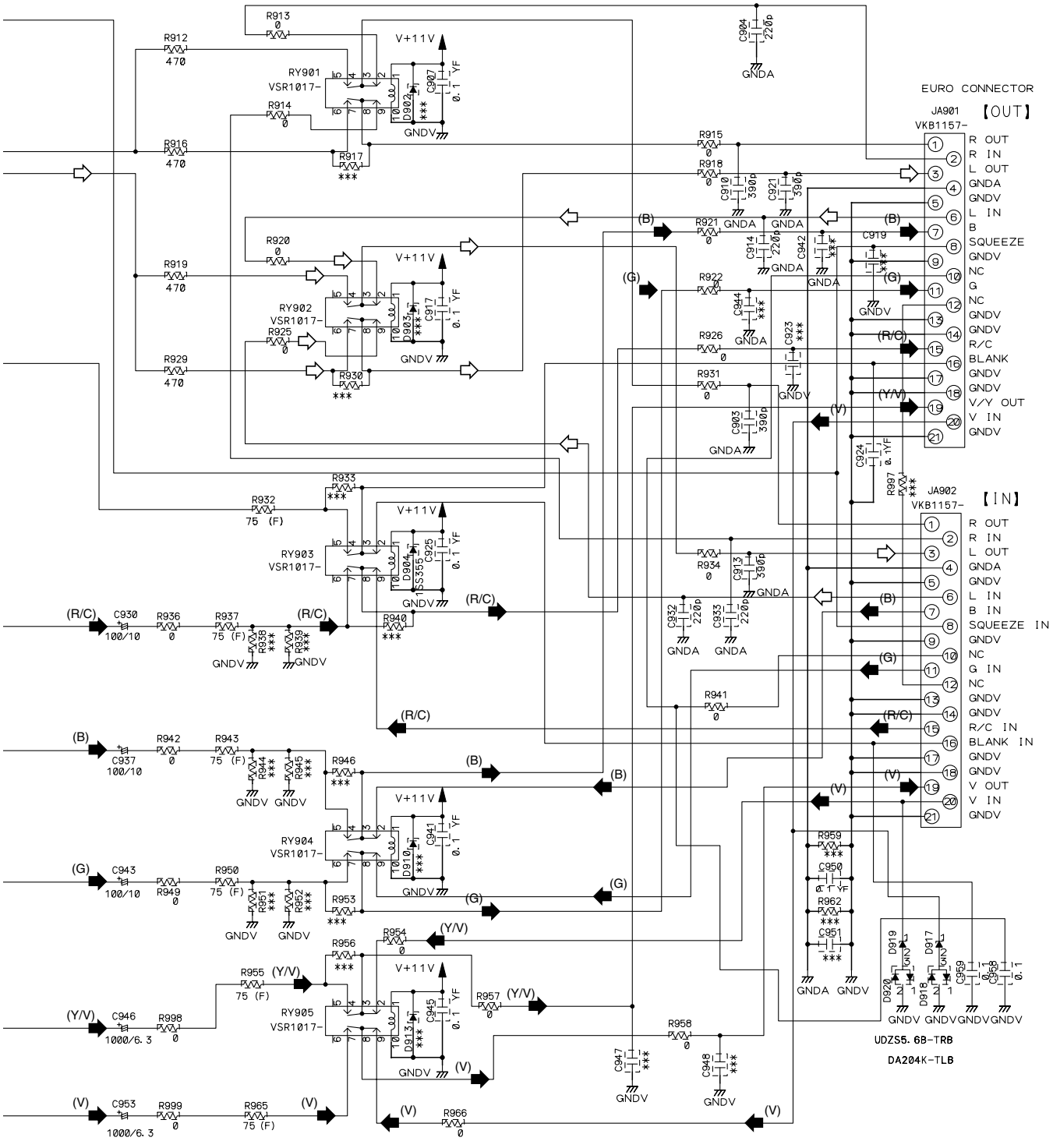

***:parts not mounted

: The power supply is shown with the marked box.

3.12 POWER SUPPLY UNIT

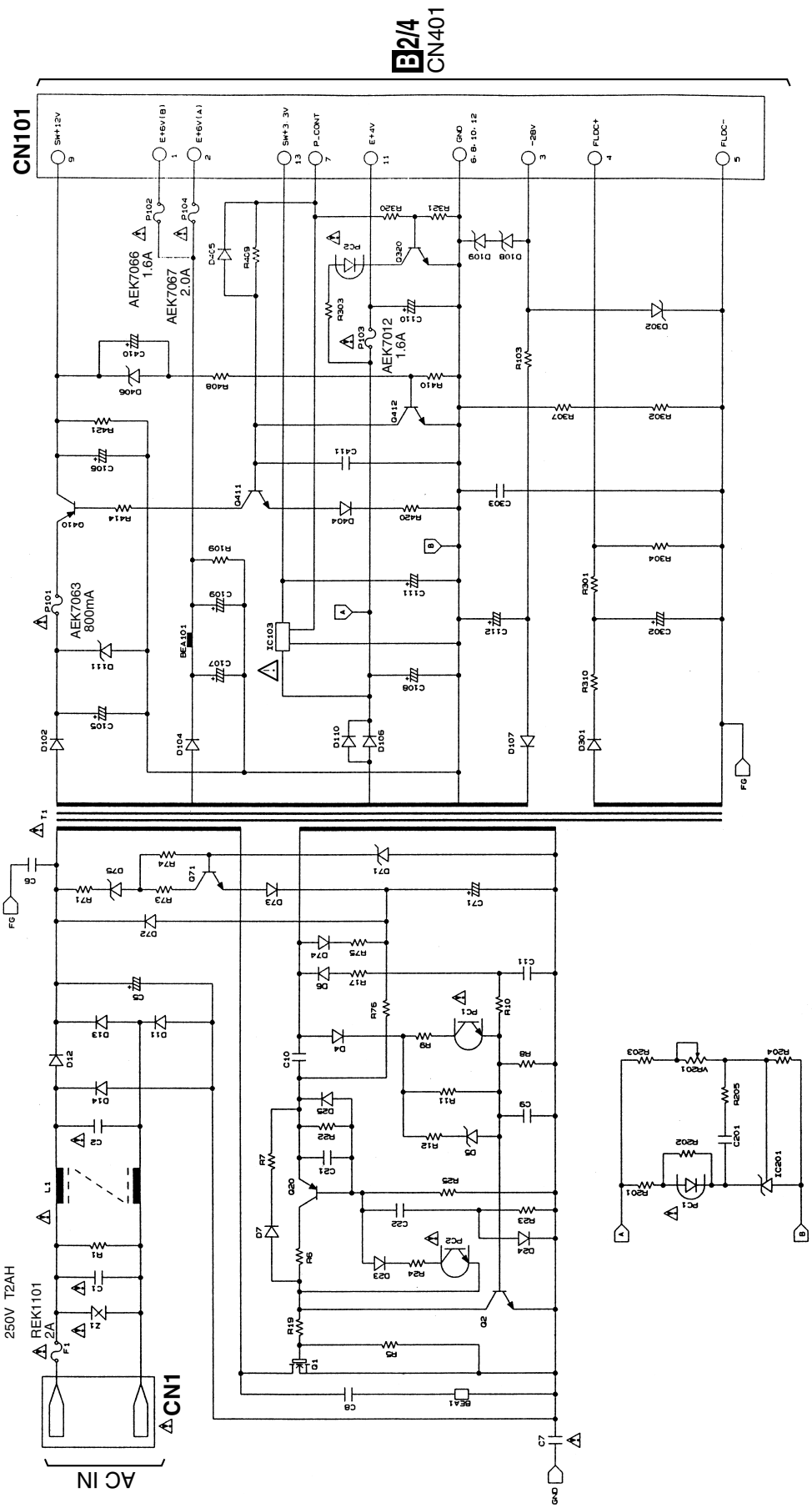

G POWER SUPPLY UNIT (VWR1352)

《 **NOTE OF SPARE PARTS IN POWER SUPPLY (SYPS) UNIT** 》

- In case of repairing, use the described parts only to prevent an accident.
- Please write the red √ mark on the board when the primary section of POWER SUPPLY (SYPS) Unit is repaired.
- Please take care to keep the space, not touching other parts when replacing the parts.

3.13 WAVEFORMS [DVDM ASSY]

■ WAVEFORMS

Note : The encircled numbers denote measuring point in the schematic diagram.

B DVDM ASSY

Measurement condition : No. 1 to 4 and 6 to 11 : MJK1, Title 1-chp 1
No. 5 : CD, ABEX-784 Track 1
No. 12 to 14 : DVD-REF-A1, T2-Chap.1
No. 15 to 20 : DVD-REF-A1, T2-Chap.19

1 **IC101-pin 3 (RF)**
V: 200mV/div. H: 0.1µsec/div.

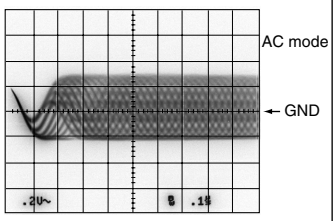

2 **Q106-emitter (RFO)**
V: 500mV/div. H: 0.1µsec/div.

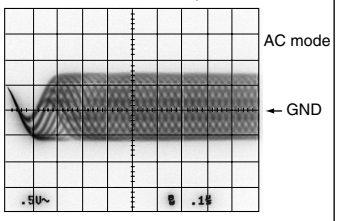

3

4 **IC101-pin 42 (Tracking Error)**
(AI-Inner Tracking Off)
V: 500mV/div. H: 2msec/div.

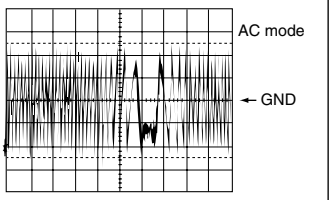

5 **IC201 - pin 39 (EFM before slice)**
V: 0.5V/div. H: 0.2µsec/div.

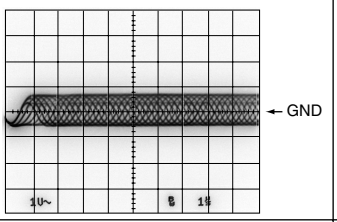

6 **IC201 - pin 1 (EFM)**
V: 1V/div. H: 0.2µsec/div.

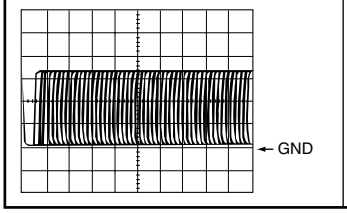

7 **IC251 - pin 24 (FG)**
V: 1V/div. H: 5msec/div.

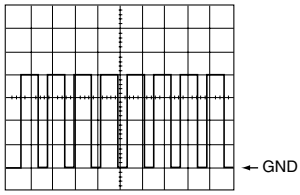

8 **Foot of R261 (FPWM)**
V: 1V/div. H: 10µsec/div.

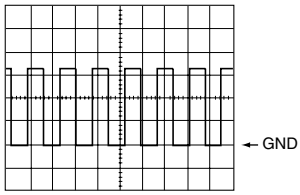

9 **Foot of R262 (VPWM)**
V: 1V/div. H: 10µsec/div.

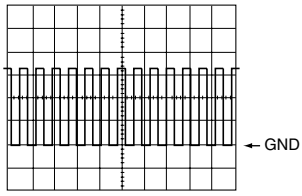

10 **Foot of R263 (PPWM)**
V: 1V/div. H: 0.2msec/div.

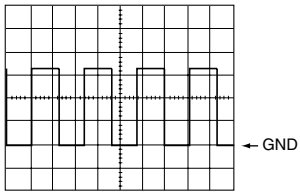

11 **Foot of R264 (RPWM)**
V: 1V/div. H: 5msec/div.

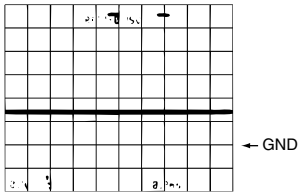

12 **Foot of R964 (V)**
V: 0.2V/div. H: 10µsec/div.

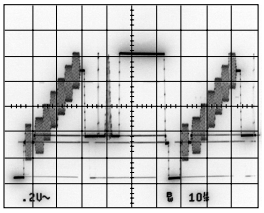

13 **Foot of R963 (C)**
V: 0.2V/div. H: 10µsec/div.

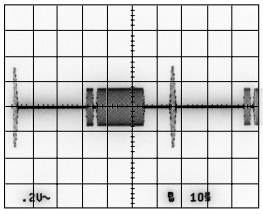

14 **Foot of R960 (Y)**
V: 0.2V/div. H: 10µsec/div.

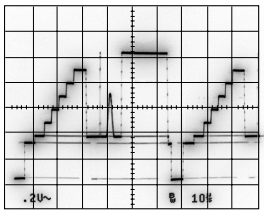

15 **Foot of R959 (Y)**
V: 0.2V/div. H: 10µsec/div.

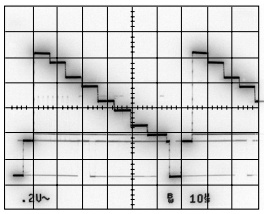

16 **Foot of R958 (Pb)**
V: 0.2V/div. H: 10µsec/div.

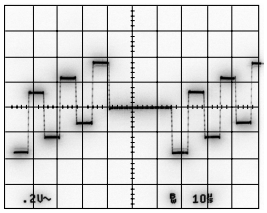

17 **Foot of R957 (Pr)**
V: 0.2V/div. H: 10µsec/div.

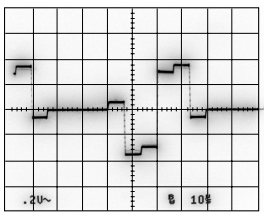

18 **Foot of R959 (Y) Progressive**
V: 0.2V/div. H: 10µsec/div.

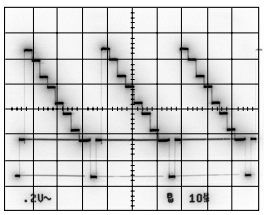

19 **Foot of R958 (Pb) Progressive**
V: 0.2V/div. H: 10µsec/div.

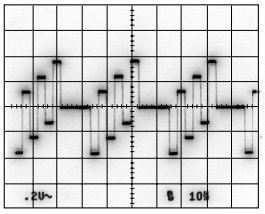

20 **Foot of R957 (Pr) Progressive**
V: 0.2V/div. H: 10µsec/div.

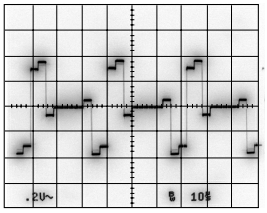

3.14 WAVEFORMS [JACB ASSY]

C JACB ASSY

Measurement condition : No. 21 to 25 : DVD-REF-A1, T2-Chap.1

21 **IC301-pin 4 (LRCK)**
V: 1V/div. H: 5µsec/div.

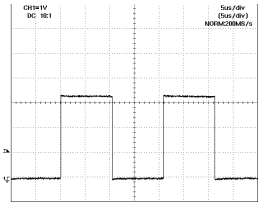

22 **IC301-pin 5 (DATA0)**
V: 1V/div. H: 500nsec/div.

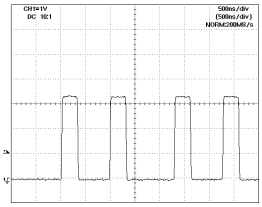

23 **IC301-pin 6 (BCK)**
V: 1V/div. H: 100nsec/div.

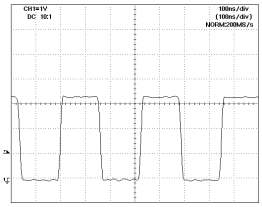

24 **IC301-pin 7 (PMCK)**
V: 1V/div. H: 20nsec/div.

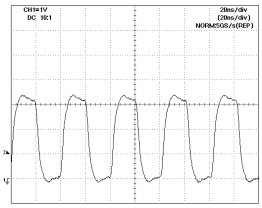

25 **IC302 - pin 1 (Analog OUT)**
V: 1V/div. H: 500µsec/div.

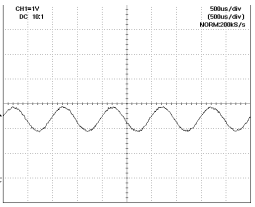

4. PCB CONNECTION DIAGRAM
4.1 LOAB ASSY

NOTE FOR PCB DIAGRAMS :

1. Part numbers in PCB diagrams match those in the schematic diagrams.
2. A comparison between the main parts of PCB and schematic diagrams is shown below.

Symbol In PCB Diagrams	Symbol In Schematic Diagrams	Part Name
B C E	B C E B C E	Transistor
B C E	B C E B C E	Transistor with resistor
D G S	D G S D G S	Field effect transistor
		Resistor array
		3-terminal regulator

3. The parts mounted on this PCB include all necessary parts for several destinations.
   For further information for respective destinations, be sure to check with the schematic diagram.
4. View point of PCB diagrams.

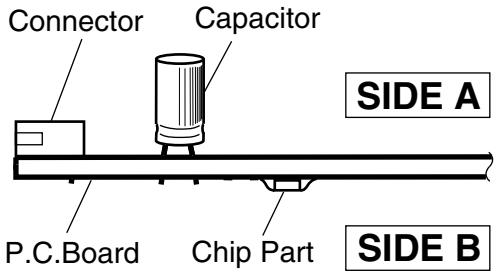

SIDE A

SIDE B

A LOAB ASSY

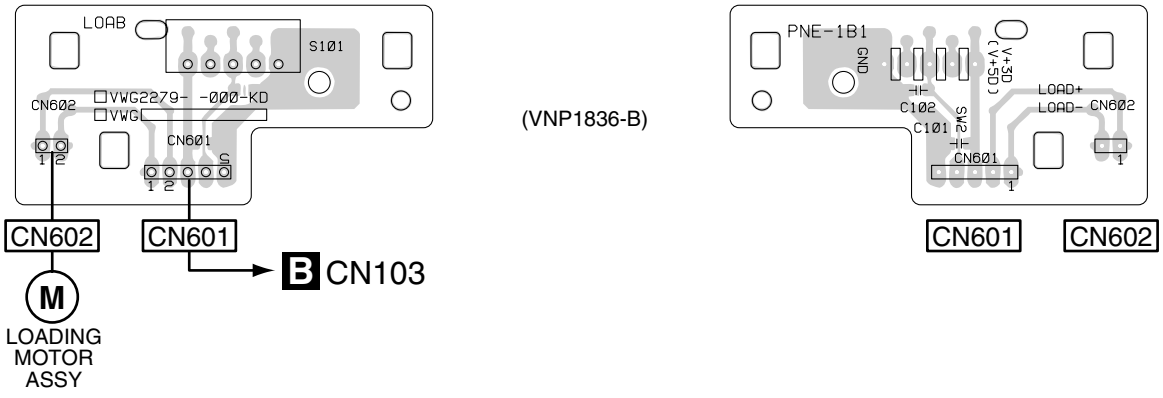

A **A**

4.2 DVDM ASSY

SIDE A

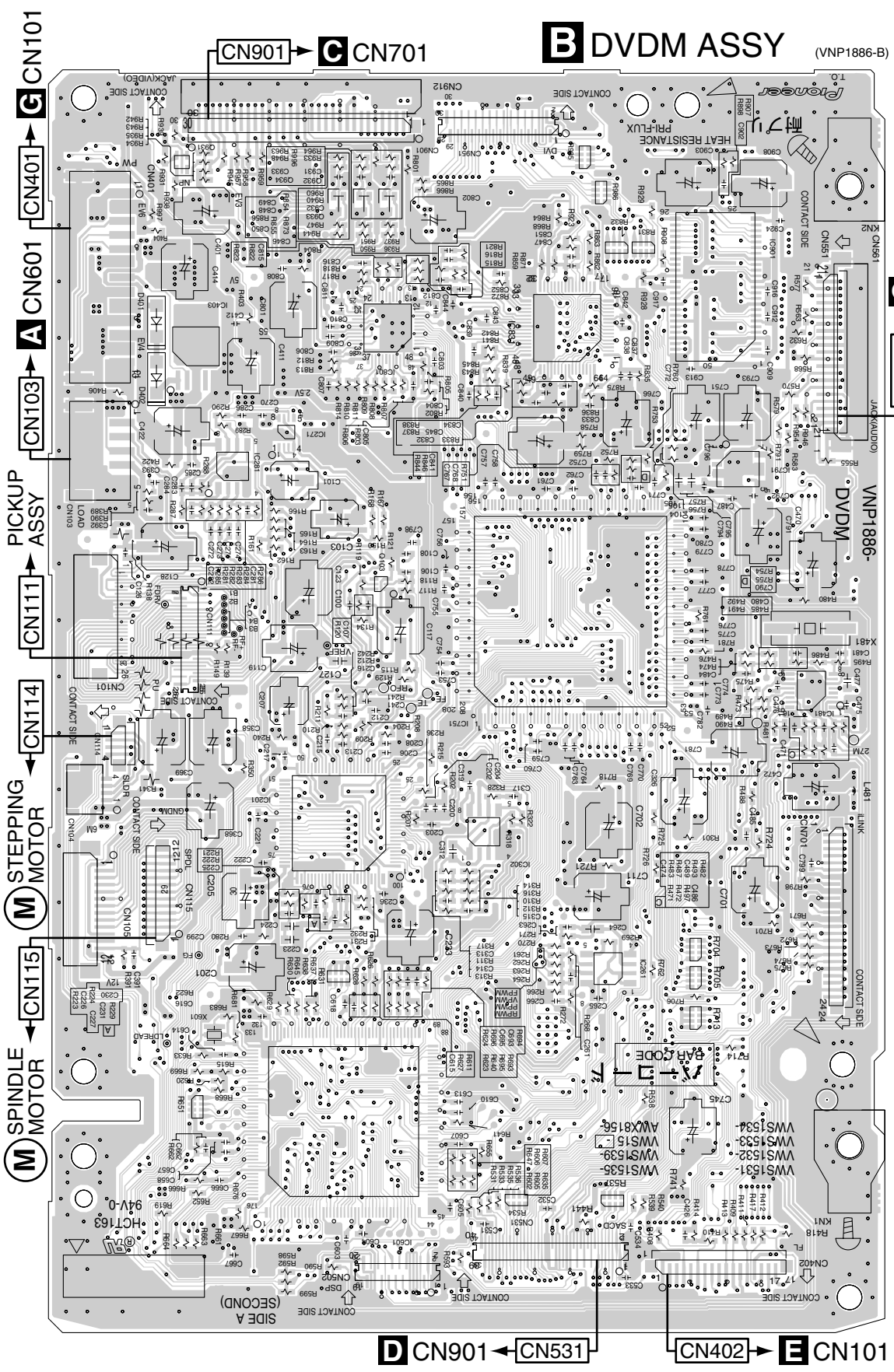

SIDE B

B DVDM ASSY (VNP1886-B)

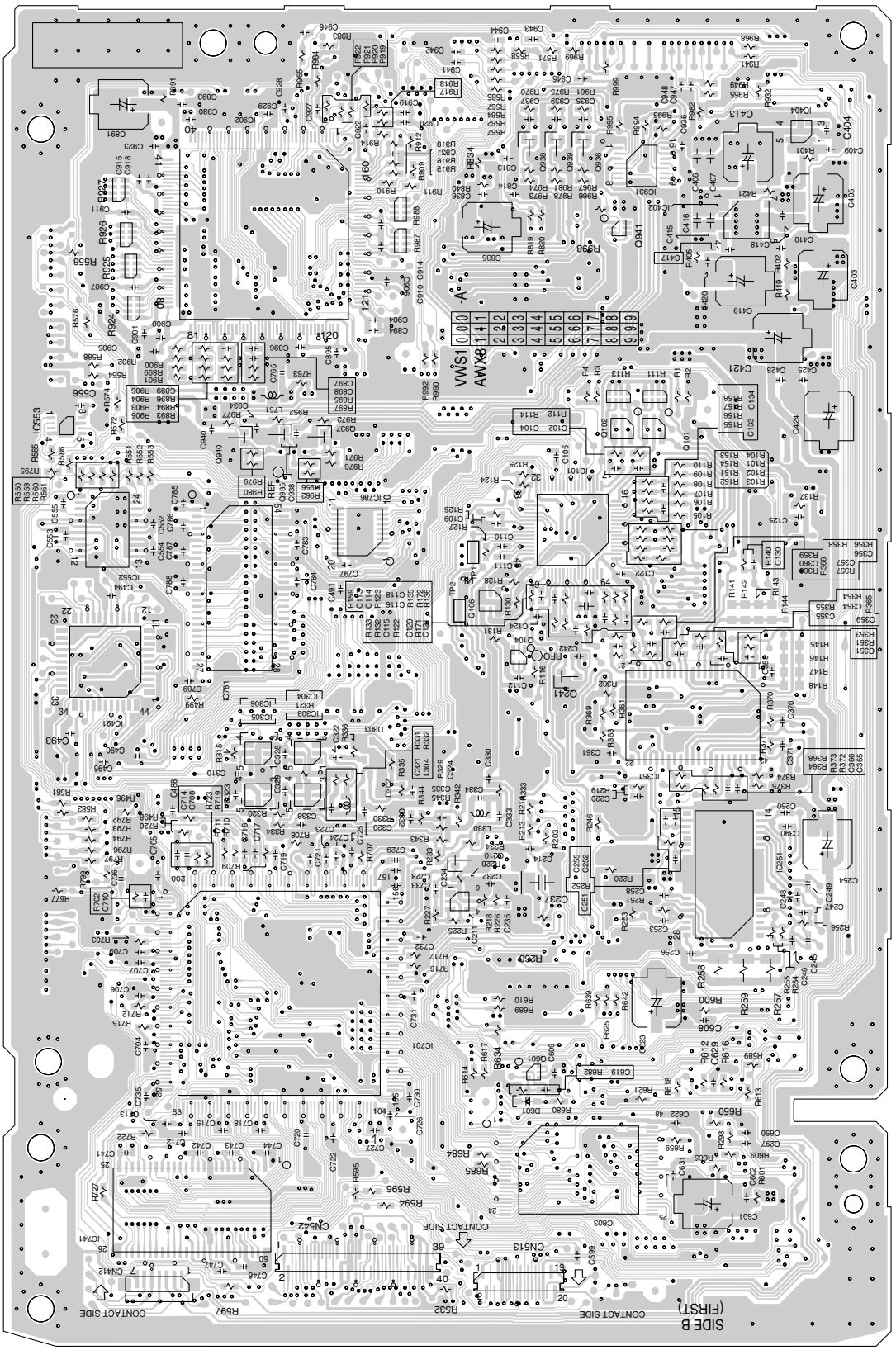

4.3 JACB ASSY

SIDE A

C JACB ASSY (VNP1887-C)

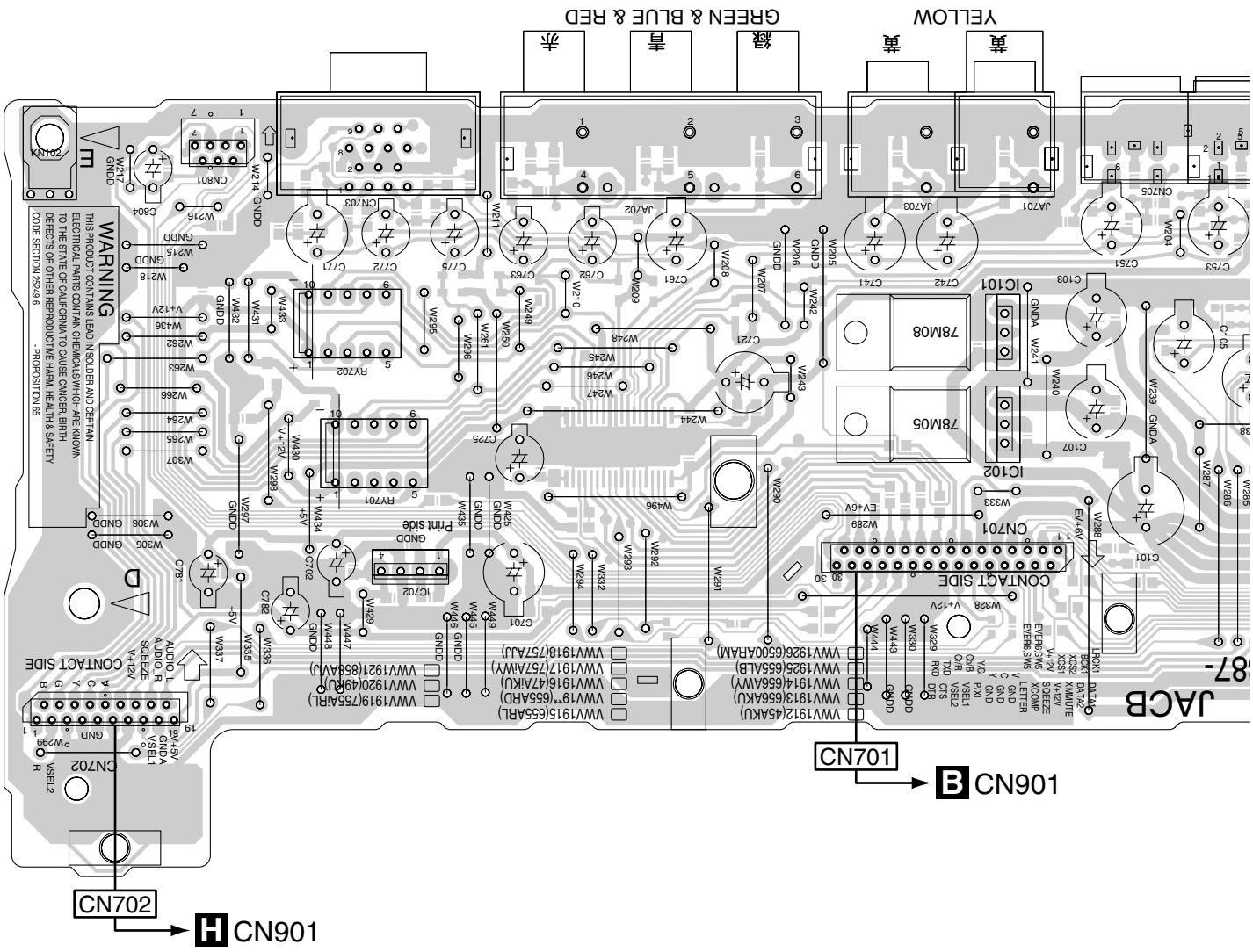

SIDE A

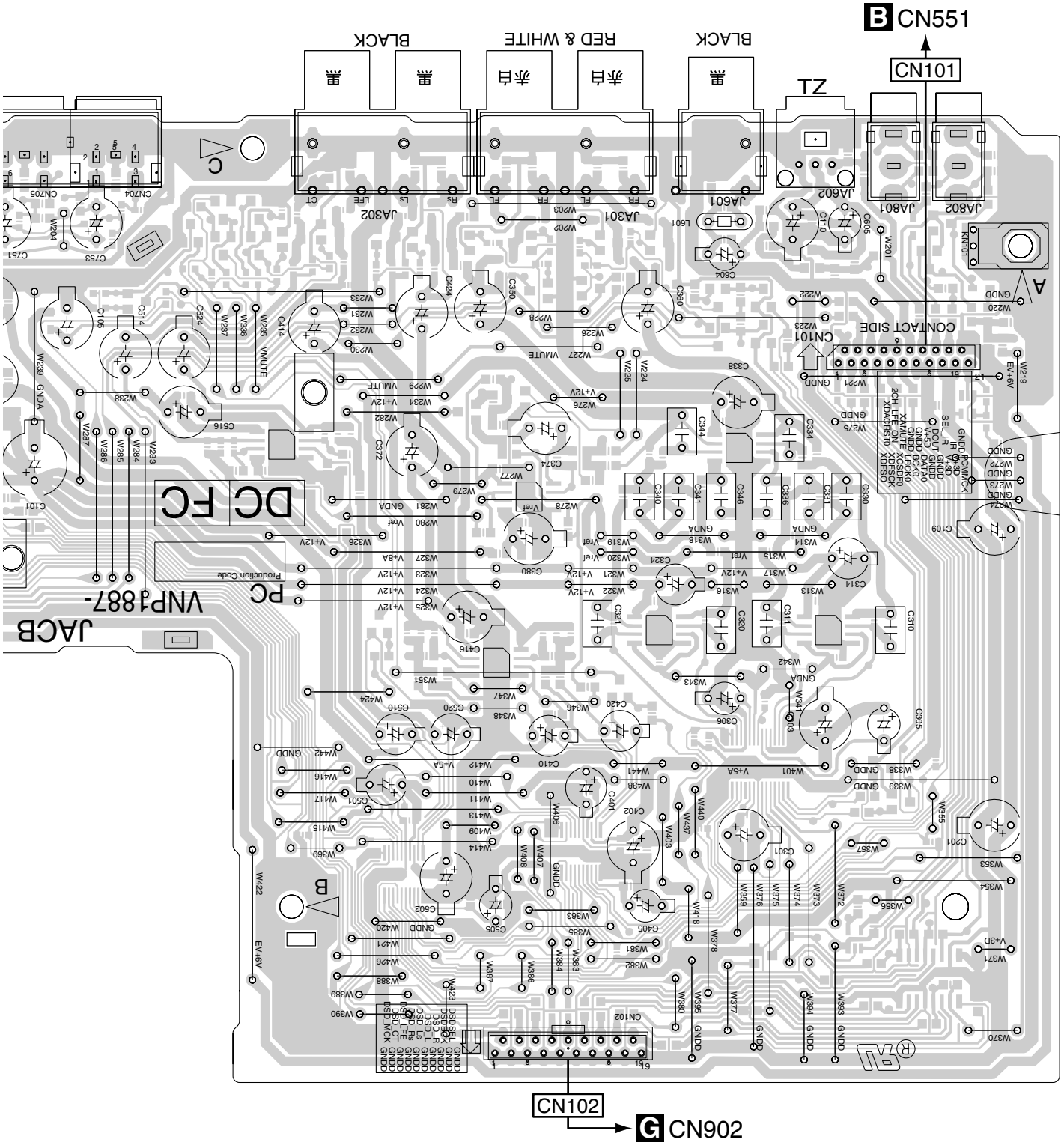
B CN551
CN101
ZL
BLACK
RED & WHITE
BLACK
黒
黒
黒
赤白
赤白
JA801
JA802
JA602
JA601
JA301
JA302
CONTACT SIDE
CN101
CN102
G CN902
JACB
VNP4887-
PC
Production Code
DC FC
A
B
C

SIDE B

C JACB ASSY (VNP1887-C)

CN101

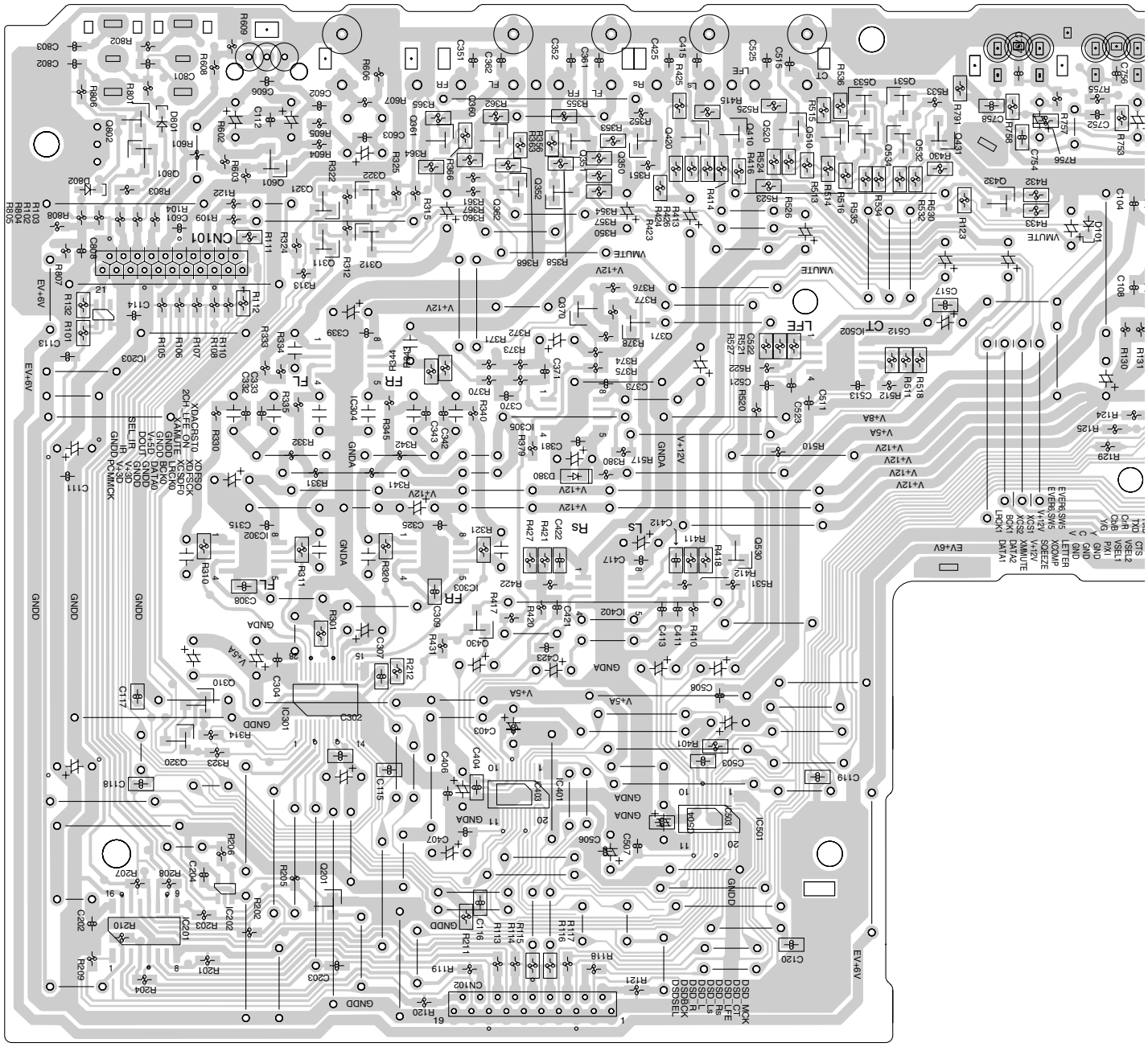

CN102

Q802 Q801 Q601 Q322 Q361 Q360 Q352 Q351 Q350 Q420 Q520 Q510 Q533 Q531 Q431 Q432
Q320 Q310 Q321 Q362 Q370 Q371 Q410 Q532
Q311 Q312 Q430 Q530 Q534
Q201

IC302 IC304 IC305 IC402 IC503
IC202 IC301 IC303 IC403 IC501
IC201 IC401

C

SIDE B

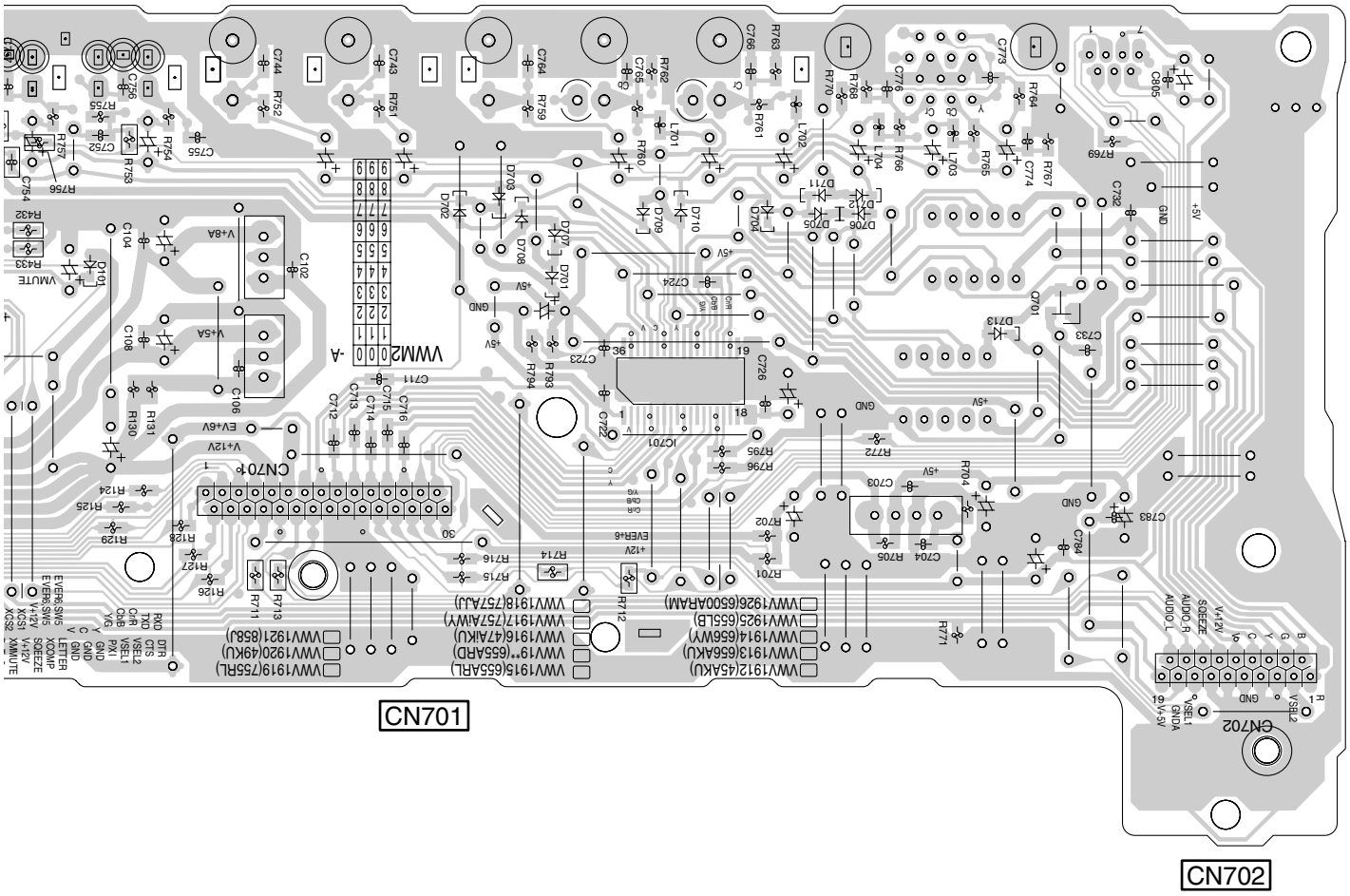

4.4 SACDB ASSY

SIDE A

SIDE A

C CN102

CN902

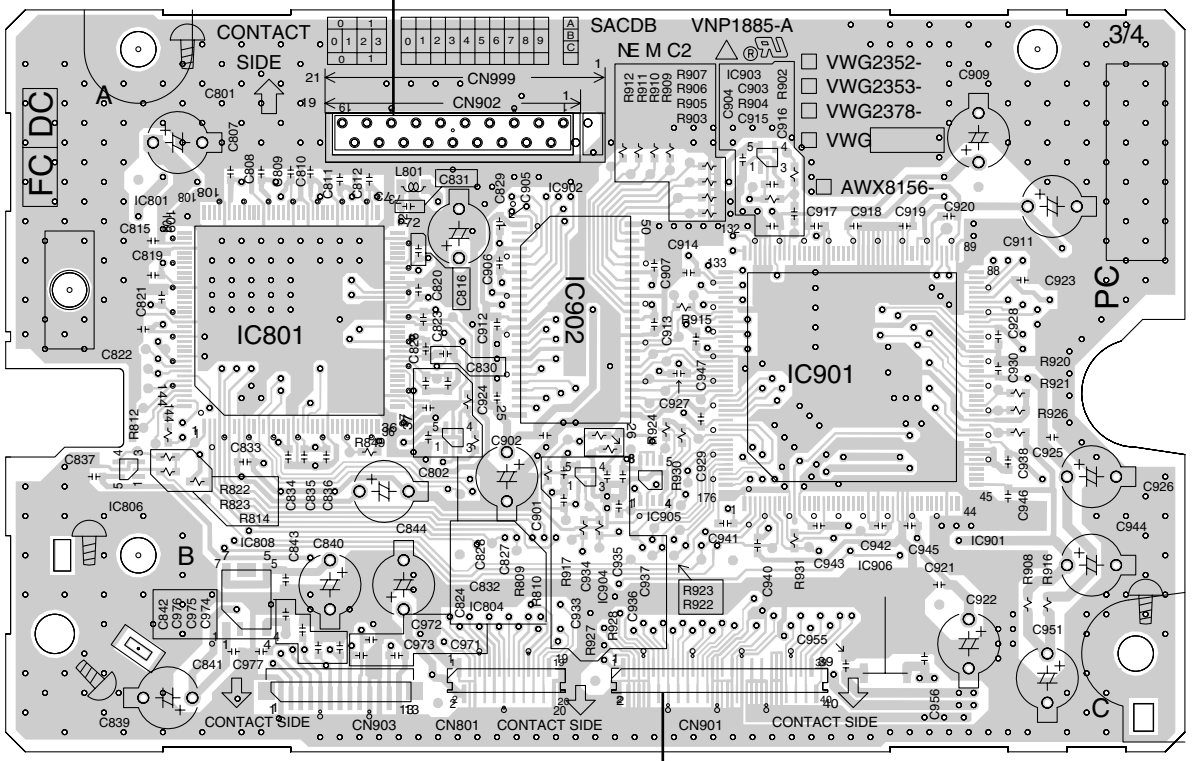

CN901

B CN531

SIDE B

D SACDB ASSY (VNP1885-A)

SIDE B

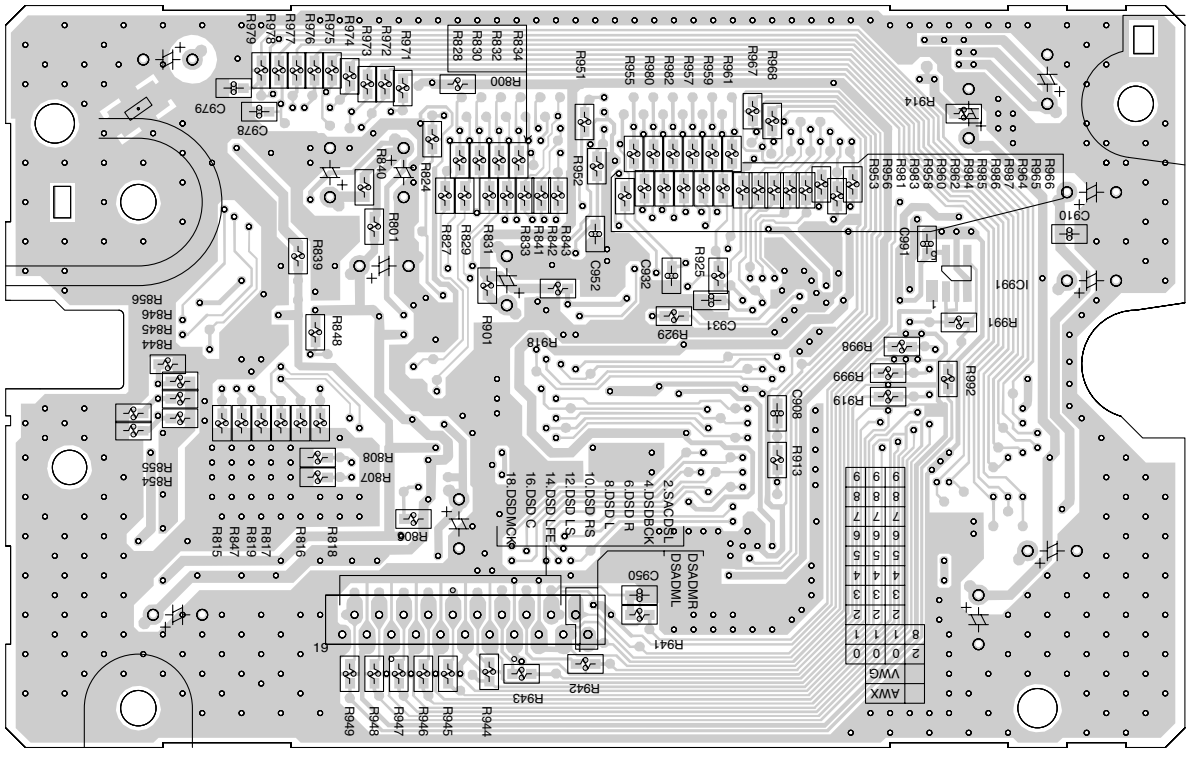

D

D

4.5 SCRB ASSY

SIDE A

SIDE B

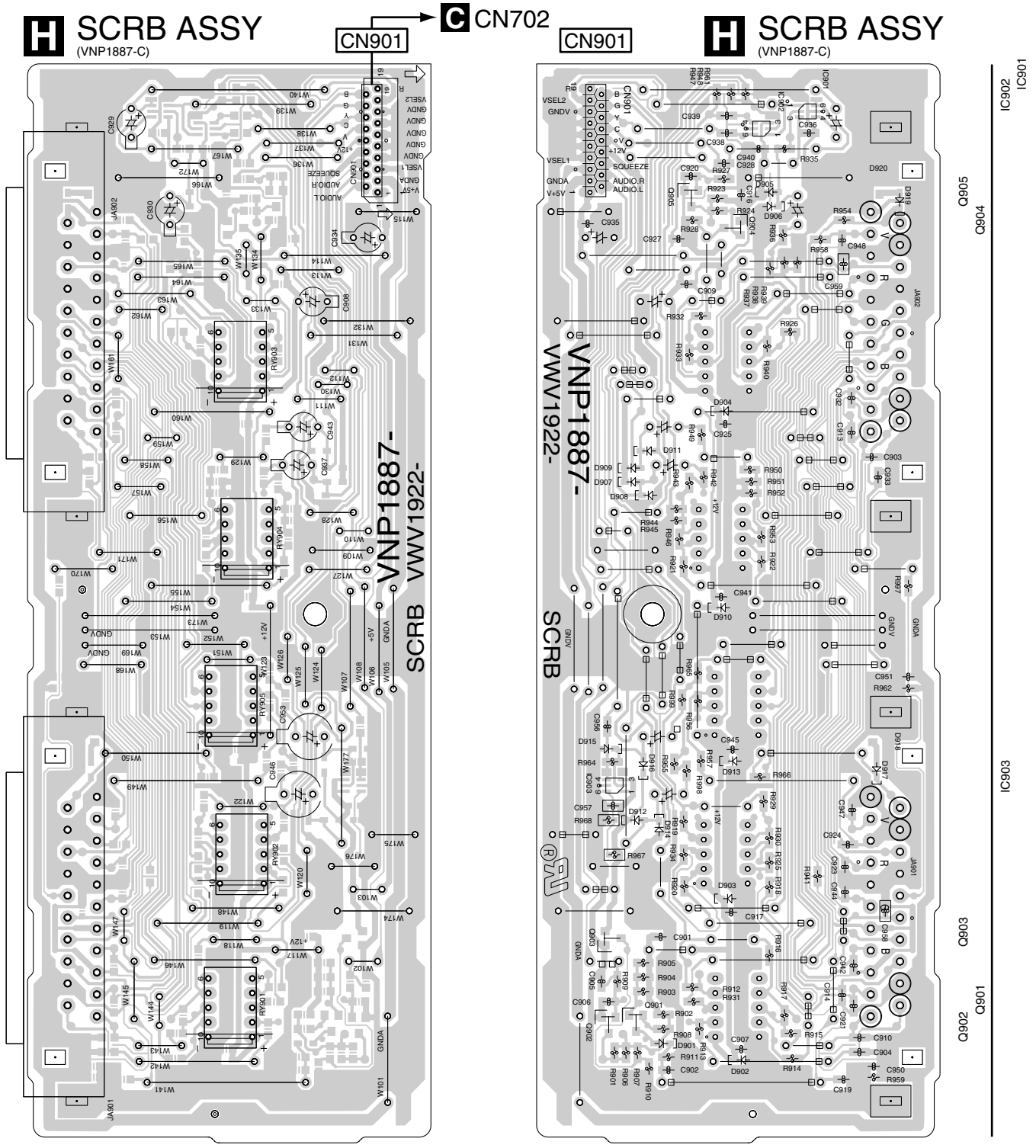

4.6 FLKY and KEYB ASSYS

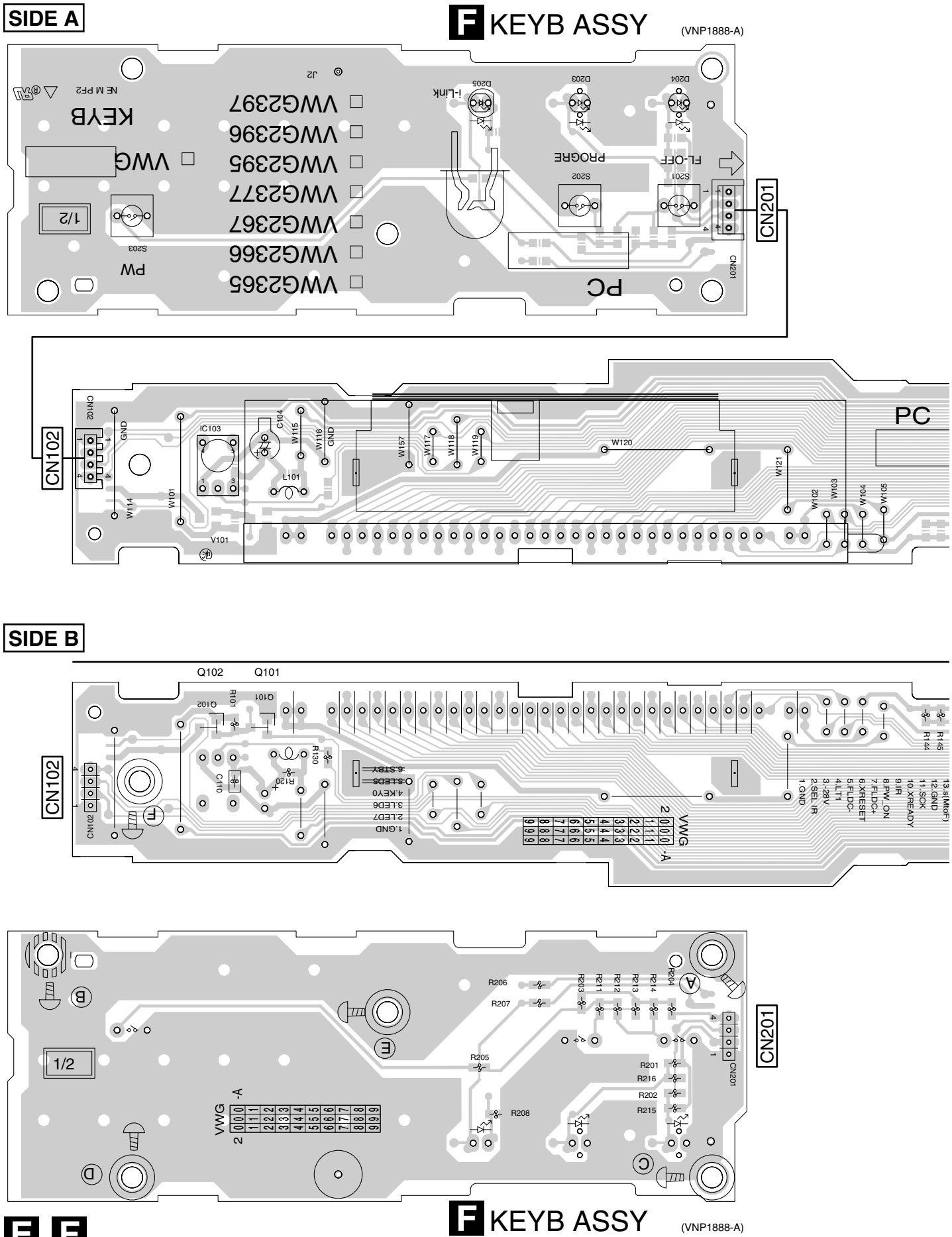

SIDE A

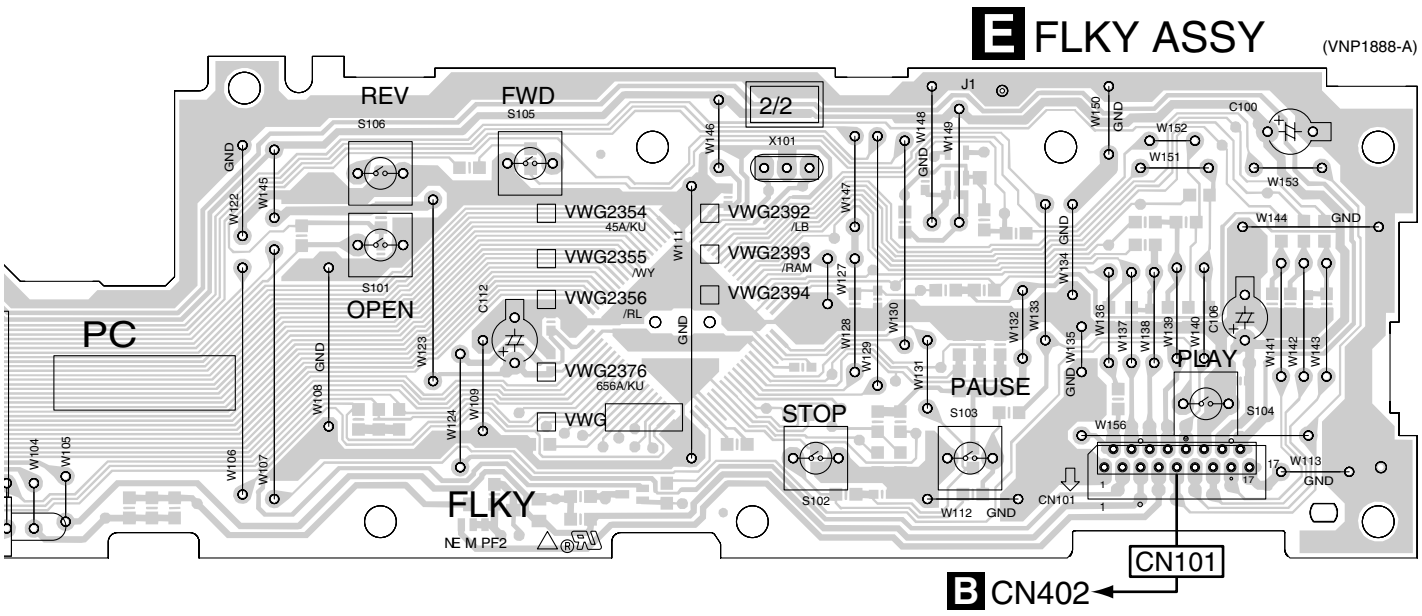
E FLKY ASSY
(VNP1888-A)
REV
S106
FWD
S105
2/2
X101
J1
C100
W152
W151
W153
W144
GND
VWG2354
45A/KU
VWG2355
/WY
VWG2356
/RL
VWG2376
656A/KU
VWG
VWG2392
/LB
VWG2393
/RAM
VWG2394
S101
OPEN
PC
STOP
S102
PAUSE
S103
PLAY
S104
W156
W113
CN101
W112
FLKY
NE M PF2
B CN402

SIDE B

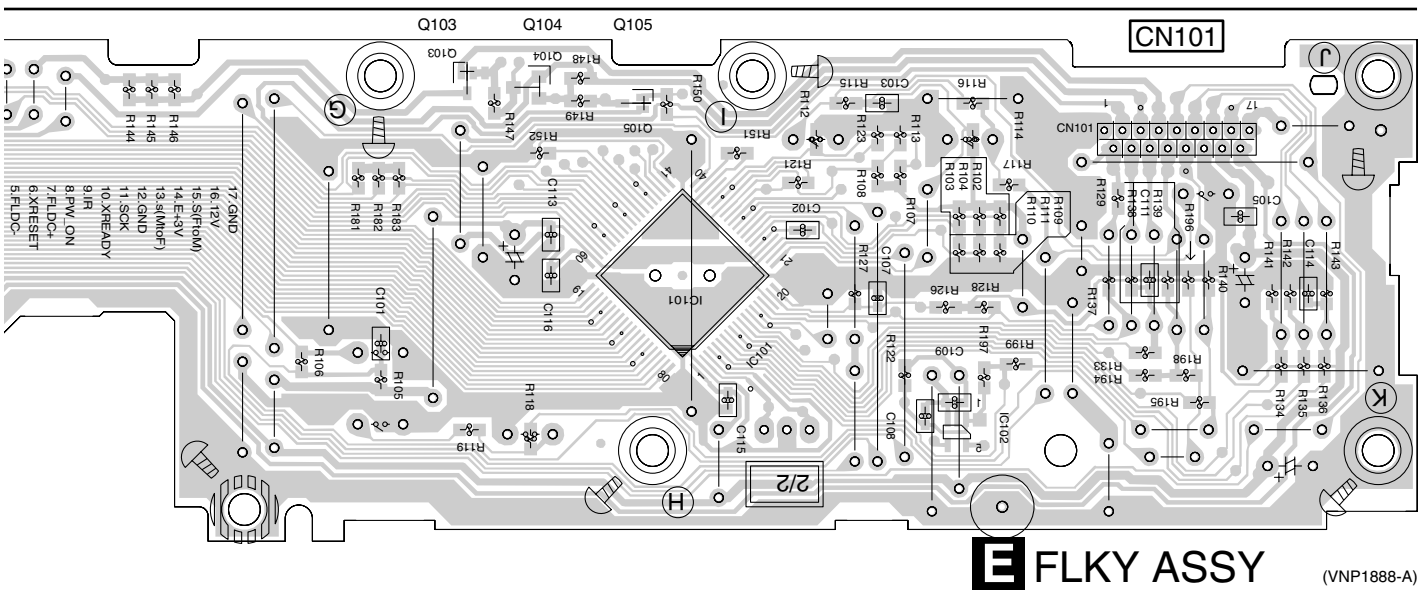
IC101
IC102
Q103
Q104
Q105
CN101
2/2
E FLKY ASSY
(VNP1888-A)

4.7 POWER SUPPLY UNIT

SIDE A

SIDE A

AC IN

G POWER SUPPLY UNIT

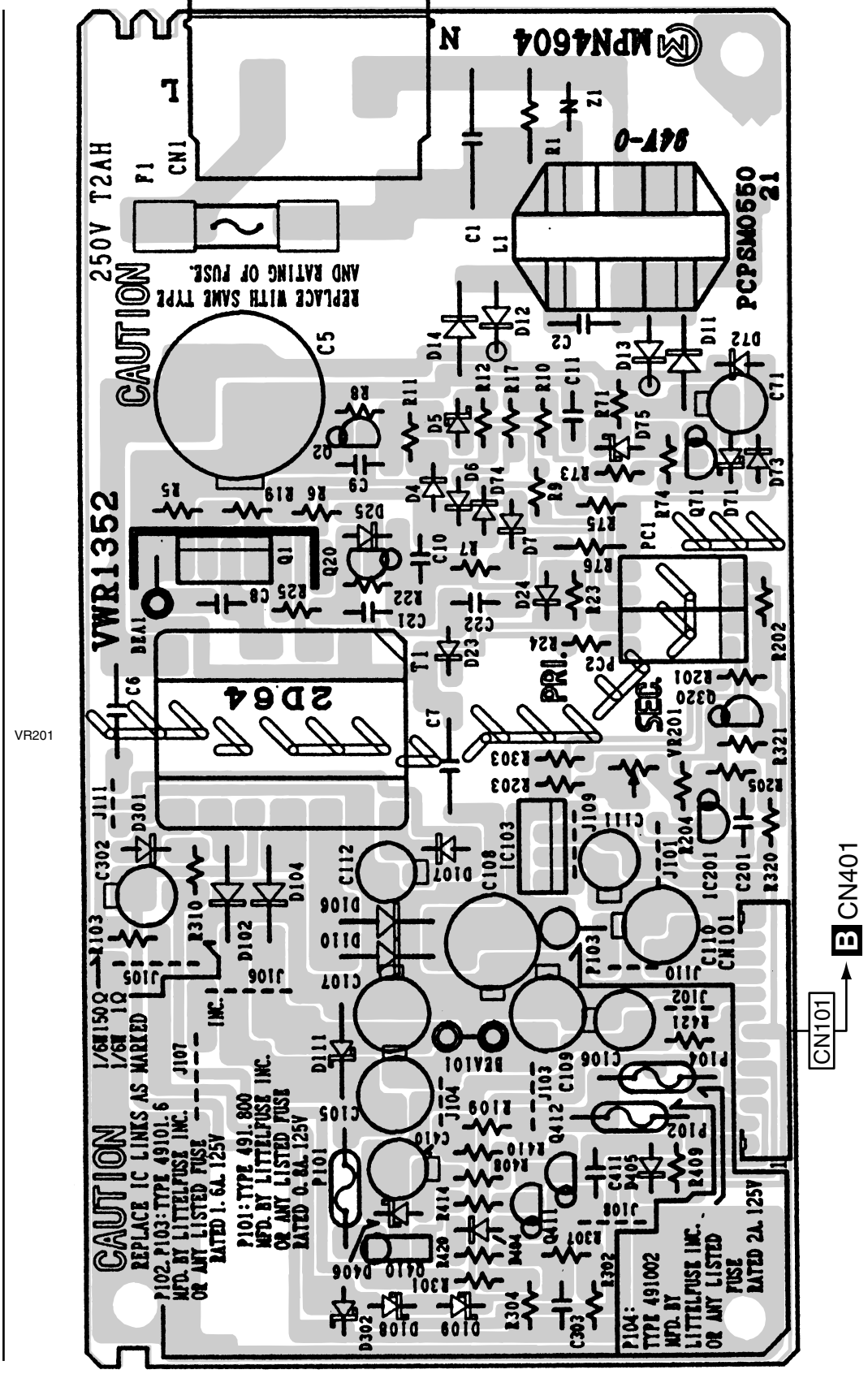

5. PCB PARTS LIST

NOTES: ● *Parts marked by "NSP" are generally unavailable because they are not in our Master Spare Parts List.*
● *The ⚠ mark found on some component parts indicates the importance of the safety factor of the part. Therefore, when replacing, be sure to use parts of identical designation.*
● *When ordering resistors, first convert resistance values into code form as shown in the following examples.*
Ex.1 When there are 2 effective digits (any digit apart from 0), such as 560 ohm and 47k ohm (tolerance is shown by J=5%, and K=10%).

560 Ω	→ *56 x 10[1]* →	*561*	*RD1/4PU 5 6 1 J*
47k Ω	→ *47 x 10[3]* →	*473*	*RD1/4PU 4 7 3 J*
0.5 Ω	→ *R50*		*RN2H R 5 0 K*
1 Ω	→ *1R0*		*RS1P 1 R 0 K*

Ex.2 When there are 3 effective digits (such as in high precision metal film resistors).

5.62k Ω	→ *562 x 10[1]* →	*5621*	*RN1/4PC 5 6 2 1 F*

LIST OF ASSEMBLIES

Mark	No.	Description	Part No.
NSP	1	..LOADING MECHANISM ASSY	VWT1196
NSP	2	..LOAB ASSY	VWG2346
	1	..DVDM ASSY	VWS1539
	1	..JCSB ASSY	VWM2146
	2	..JACB ASSY	VWV1914
	2	..SCRB ASSY	VWV1922
	1	..SACDB ASSY	VWG2378
	1	..FLKB ASSY	VWM2133
	2	..FLKY ASSY	VWG2355
	2	..KEYB ASSY	VWG2366
⚠	1	..POWER SUPPLY UNT	VWR1352

A LOAB ASSY

SWITCHES AND RELAYS

Mark	No.	Description	Part No.
	S101	REAF SWITCH	VSK1011

OTHERS

Mark	No.	Description	Part No.
	CN602	CONNCTOR	S2B-PH-K
	CN601	CONNCTOR	S5B-PH-K
		PRINTED CIRCUIT BOARD	VNP1836

B DVDM ASSY

SEMICONDUCTORS

Mark	No.	Description	Part No.
	IC801		ADV7172KST
	IC261, IC302		BA4510F
	IC251		BA6664FM
	IC741		HY57V161610DTC-8
	IC101		LA9704W
	IC201		LC78652W
	IC781		M2V64S40DTP-7
	IC351		M56788AFP
	IC751		M65776AFP
⚠	IC404		MM1385EN
⚠	IC791		MM1561JF
⚠	IC402		MM1565AF
	IC601		PD6345A
	IC701		PE5286A
⚠	IC403		PQ025EZ01ZP
	IC481		SM8707HV
	IC786		TC74VHC541FT
	IC303, IC304, IC306		TC7SZU04F
	IC211		TK15404M
	IC603		VYW1900

Mark	No.	Description	Part No.
	Q210, Q932–Q934, Q936		2SA1576A
	Q938, Q939		2SA1576A
	Q241		DTC114EUA
	Q101, Q102, Q106		HN1A01F
	Q103, Q104		HN1B04FU
	Q931		RN1911
	Q601, Q941		RN4982
	D302, D303		KV1470
	D401, D402		RB051L-40
	D601		RB501V-40

COILS AND FILTERS

Mark	No.	Description	Part No.
	L304		LCYA1R2J2520
	L4080, L4090, L4100	CHIP BEADS	VTL1074
	L4110, L4120	CHIP BEADS	VTL1074
	L4130, L4820, L4880	CHIP BEADS	VTL1074
	L4910, L4920	CHIP BEADS	VTL1074
	L802	CHIP BEADS	VTL1074
	L4870	CHIP BEADS	VTL1079
	L4830, L4890, L4900	CHIP BEADS	VTL1081
	L4800, L481	CHIP BEADS	VTL1084

CAPACITORS

Mark	No.	Description	Part No.
	C474, C480, C481, C662		CCSRCH100D50
	C121, C532, C950, C953–C955		CCSRCH101J50
	C314, C798		CCSRCH150J50
	C100, C133		CCSRCH151J50
	C120		CCSRCH181J50
	C484, C485, C487, C491		CCSRCH220J50
	C134, C324, C391, C392		CCSRCH331J50
	C945, C946		CCSRCH331J50
	C109		CCSRCH391J50
	C297		CCSRCH470J50
	C241		CCSRCH560J50
	C107, C360		CCSRCH681J50
	C488, C490		CCSRCH820J50
	C489		CCSRCH8R0D50
	C117, C123, C128, C201, C233		CEV101M16
	C254, C368, C369, C403, C405		CEV101M16
	C411, C413, C414, C419, C422		CEV101M16
	C801		CEV101M16
	C103		CEV220M16
	C119, C205, C326, C421, C424		CEV221M4
	C470, C472, C601, C623		CEV221M4
	C701, C702, C711, C745		CEV221M4

Mark	No.	Description	Part No.
	C751, C752, C766, C781, C791		CEV221M4
	C793		CEV221M4
	C101		CEV470M6R3
	C116, C127, C223, C224, C264		CKSQYB105K10
	C312, C406, C407, C415, C416		CKSQYB105K10
	C477, C794, C795		CKSQYB105K10
	C216, C313, C351, C427, C531		CKSRYB102K50
	C533, C534, C606, C617, C621		CKSRYB102K50
	C703, C748, C817, C818, C951		CKSRYB102K50
	C110, C113, C203, C220, C225		CKSRYB103K50
	C234, C261, C320–C322, C330		CKSRYB103K50
	C404, C426, C619		CKSRYB103K50
	C108, C111, C114, C115		CKSRYB104K16
	C212, C213, C227, C231		CKSRYB104K16
	C248–C251, C255, C263, C315		CKSRYB104K16
	C317		CKSRYB104K16
	C106		CKSRYB152K50
	C208		CKSRYB222K50
	C266		CKSRYB224K10
	C206, C214, C242, C357		CKSRYB472K50
	C105, C118, C122, C253, C256		CKSRYF104Z25
	C332, C353, C359, C365, C366		CKSRYF104Z25
	C609, C622, C631, C723, C755		CKSRYF104Z25
	C758, C761, C762, C767, C768		CKSRYF104Z25
	C803, C806, C807, C809–C812		CKSRYF104Z25
	C815, C816, C933, C939		CKSRYF104Z25
	C112, C125, C126, C130, C200		CKSRYF105Z10
	C202, C204, C215, C217		CKSRYF105Z10
	C221, C222, C226, C230, C232		CKSRYF105Z10
	C236, C258, C265, C299, C310		CKSRYF105Z10
	C319, C323, C328, C329, C409		CKSRYF105Z10
	C412, C418, C423, C428		CKSRYF105Z10
	C475, C476, C602–C605		CKSRYF105Z10
	C607, C608, C610, C613–C616		CKSRYF105Z10
	C618, C657, C658, C704		CKSRYF105Z10
	C706–C710, C712–C716		CKSRYF105Z10
	C718–C722, C724–C732, C735		CKSRYF105Z10
	C741–C744, C746, C747		CKSRYF105Z10
	C753, C754, C756, C757		CKSRYF105Z10
	C759, C760, C763–C765		CKSRYF105Z10
	C769–C780, C782–C790, C792		CKSRYF105Z10
	C797, C956, C957		CKSRYF105Z10

RESISTORS

R631, R713		RAB4C103J
R111		RAB4C220J
R113, R534, R537, R704, R705		RAB4C470J
R138		RS1/10S0R0J
R341		RS1/10S101J
R141–R148		RS1/10S220J
R364, R369, R373, R375		RS1/16S1003F
R123		RS1/16S1202F
R936, R944, R950, R966, R973		RS1/16S1500F
R978		RS1/16S1500F
R358, R361		RS1/16S1503F
R755		RS1/16S1801F
R754		RS1/16S3001F
R751		RS1/16S3301F
R132		RS1/16S4702F
R810, R817		RS1/16S6800F
R357, R362, R363, R368, R372		RS1/16S6802F
R374		RS1/16S6802F
R257 (R=1.0)		VCN1127
R258, R259 (R=2.2)		VCN1128
Other Resistors		RS1/16S###J

OTHERS

CN401	PH CONNECTER	S13B-PH-SM3
CN103	CONNECTOR	S5B-PH-SM3
9006	FLEXIBLE CABLE	VDA1681
CN114	4P CONNECTOR	VKN1409
CN115	12P CONNECTOR	VKN1416
CN402	17P CONNECTOR	VKN1421
CN551	21P CONNECTOR	VKN1425
CN901	30P CONNECTOR	VKN1434
CN111	26P CONNECTOR	VKN1790
CN531	FFC CONNECT0R	VKN1794
KN1, KN2	EARTH METAL FITTING	VNF1109
X481 (27.000MHz)		VSS1159
X601 (16.5MHz)		VSS1160

C JACB ASSY

SEMICONDUCTORS

	IC401, IC501	DSD1702EG
	IC701	LA73054
	IC304, IC305, IC402, IC502	NJM2068M
	IC302, IC303	NJM4565M
⚠	IC102	NJM78M05FA
⚠	IC101	NJM78M08FA
	IC301	PCM1738EG-3
⚠	IC702	PQ05RD11
	IC201	TC74VHC157F
	IC202	TC7SH08F
	IC203	TC7SHU04F
	Q312, Q322, Q371, Q432, Q532	2SA1037K
	Q534	2SA1037K
	Q601, Q701, Q801, Q802	2SC2412K
	Q350–Q352, Q360–Q362, Q410	2SD2114K
	Q420, Q510, Q520	2SD2114K
	Q201, Q310, Q311, Q320, Q321	DTC114YK
	Q370, Q430, Q431, Q530, Q531	DTC114YK
	Q533	DTC114YK
	D701–D713, D801, D802	1SS355
	D380	UDZS6.2B

COILS AND FILTERS

L701, L702	CHIP BEADS	VTL1089

SWITCHES AND RELAYS

RY701, RY702		VSR1017

CAPACITORS

	C307, C406, C506	CCSRCH331J50
	C115, C116, C118–C120, C801	CCSRCH470J50
	C702, C721	CEAT101M16
	C701, C741, C742, C751, C753	CEAT102M6R3
	C761	CEAT102M6R3
	C350, C360, C414, C424	CEAT470M16
	C110, C725, C762, C763	CEAT471M6R3
	C101, C103, C107, C314, C324	CEJQ101M16
	C338, C372, C374, C380, C401	CEJQ101M16
	C410, C416, C420, C501, C510	CEJQ101M16

Mark No.	Description	Part No.
C516, C520, C605		CEJQ101M16
C604		CEJQ1R0M50
C109, C201, C301, C303, C402		CEJQ331M6R3
C502		CEJQ331M6R3
C514, C524		CEJQ470M16
C305, C306, C405, C505		CEJQ470M6R3
C370, C371		CKSRYB104K16
C411, C421, C511, C521		CKSRYB272K50
C332, C333, C342, C343		CKSRYB472K50
C102, C104, C106, C108, C112		CKSRYF104Z25
C117, C302, C304, C315, C325		CKSRYF104Z25
C339, C373, C381, C403, C404		CKSRYF104Z25
C407, C413, C417, C423		CKSRYF104Z25
C503, C504, C507, C513, C517		CKSRYF104Z25
C523, C601, C606, C703, C704		CKSRYF104Z25
C711–C716, C732, C733, C752		CKSRYF104Z25
C754, C803, C805		CKSRYF104Z25
C111, C114, C202, C204		CKSRYF105Z10
C722–C724, C726		CKSRYF105Z10
C310, C311, C320, C321		CQMBA222J50
C334, C336, C344, C346		CQMBA471J50
C412, C422, C512, C522	(1608CH330P)	VCH1226
RESISTORS		
R330, R331, R334, R335		RN1/16SE1001D
R340, R341, R344, R345		RN1/16SE1001D
R301		RN1/16SE1602D
R310, R311, R320, R321		RN1/16SE2000D
R410, R420, R510, R520		RN1/16SE2201D
R332, R333, R342, R343		RN1/16SE3001D
R370, R371		RN1/16SE3902D
R372, R411, R418, R421, R427		RN1/16SE8201D
R511, R518, R521, R527		RN1/16SE8201D
R1101		RS1/10S0R0J
R760, R761		RS1/16S1000F
R762, R763		RS1/16S2000F
R751, R752, R754, R755		RS1/16S75R0F
R757–R759		RS1/16S75R0F
Other Resistors		RS1/16S###J
OTHERS		
CN705		AKP7010
JA602	OPT. LINK OUT	GP1FA502TZ
JA801, JA802	JACK	RKN1004
	PCB BINDER	VEF1040
JA302	JACK	VKB1126
JA301	JACK	VKB1132
JA703	JACK	VKB1134
JA702	JACK	VKB1150
JA601	JACK	VKB1159
CN702	19P CONNECTOR	VKN1250
CN101	21P CONNECTOR	VKN1252
CN701	30P CONNECTOR	VKN1261
CN801	7P CONNECTOR	VKN1267
CN102	19P CONNECTOR	VKN1775
KN101, KN102	EARTH METAL FITTING	VNF1084

D SACDB ASSY

Mark No.	Description	Part No.
SEMICONDUCTORS		
⚠ IC906		BA25BC0FP
IC901		CXD2753R
IC902		HY57V161610DTC-8
IC904		TC7SH00FU
IC991		TC7SH02F
IC905		TC7WH74FU
CAPACITORS		
C903		CCSRCH100D50
C950		CCSRCH102J50
C931		CCSRCH470J50
C901, C909, C911, C922, C926		CEJQ221M6R3
C944, C951		CEJQ221M6R3
C908, C916		CKSRYB103K50
C902, C905–C907, C912–C915		CKSRYF105Z10
C917–C921, C923–C925		CKSRYF105Z10
C927–C930, C934, C937, C938		CKSRYF105Z10
C940, C943, C945–C947		CKSRYF105Z10
C955, C956, C991		CKSRYF105Z10
RESISTORS		
All Resistors		RS1/16S###J
OTHERS		
CN902	19P CONNECTOR	VKN1775
CN901	FFC CONNECT0R	VKN1794

E FLKY ASSY

Mark No.	Description	Part No.
SEMICONDUCTORS		
IC101		PE5314B
IC102		PST3228
Q103, Q105		2SA1602A
Q104		2SC2412K
SWITCHES AND RELAYS		
S101–S106		ASG7013
CAPACITORS		
C107, C108		CCSRCH102J50
C104		CEAL470M6R3
C100		CEJQ101M6R3
C116		CKSRYF104Z50
C102, C105, C110, C113, C115		CKSRYF105Z10
RESISTORS		
All Resistors		RS1/16S###J
OTHERS		
CN102	CONNECTOR 4P	04P-FJ
IC103	REMOTE RECEIVER UNIT	SPS-452L-H
V101	FL TUBE	VAW1073
	SPACER	VEC2220
CN101	17P CONNECTOR	VKN1277
	HOLDER	VNF1122
X101	(5MHz)	VSS1142

F KEYB ASSY

Mark No.	Description	Part No.
SEMICONDUCTORS		
D203, D204		SLR-343VC(NPQ)
SWITCHES AND RELAYS		
S201–S203		ASG7013
RESISTORS		
All Resistors		RS1/16S###J

Mark	No.	Description	Part No.

OTHERS

	CN201	CONNECTOR 4P	04R-FJ

G POWER SUPPLY UNIT

OTHERS

⚠	P103	PROTECTOR(1.6A)	AEK7012
⚠	P101	PROTECTOR(800mA)	AEK7063
⚠	P102	PROTECTOR(1.6A)	AEK7066
⚠	P104	PROTECTOR(2A)	AEK7067
⚠	F1	FUSE(2A)	REK1101

H SCRB ASSY

SEMICONDUCTORS

IC901	MM1505XN
IC902, IC903	MM1507XN
Q901, Q904	2SA1037K
Q902, Q905	2SC2412K
D901, D904–D909, D911, D912	1SS355
D914–D916	1SS355
D918, D920	DA204K
D917, D919	UDZS5.6B

SWITCHES AND RELAYS

RY901–RY905	VSR1017

CAPACITORS

C904, C914, C932, C933	CCSRCH221J50
C903, C910, C913, C921	CCSRCH391J50
C927	CCSRCH470J50
C929, C930, C937, C943	CEAT101M10
C946, C953	CEAT102M6R3
C901, C902, C907, C909	CKSRYF104Z25
C916, C917, C924, C925, C928	CKSRYF104Z25
C935, C936, C938–C941, C945	CKSRYF104Z25
C950, C956–C959	CKSRYF104Z25

RESISTORS

R932, R937, R943, R950, R955	RS1/16S75R0F
R965	RS1/16S75R0F
Other Resistors	RS1/16S###J

OTHERS

JA901, JA902 CONNECTOR	VKB1157
CN901 19P CONNECTOR	VKN1279

6. ADJUSTMENT

6.1 ADJUSTMENT ITEMS AND LOCATION

■ Adjustment Items

[Mechanism Part]

❶ Tangential and Radial Height Coarse Adjustment

❷ DVD Jitter Adjustment

❸ Initialize the Focus Sweep Setting

[Electrical Part]

Electrical adjustments are not required.

■ Adjustment Points (Mechanism Part)

Cautions: After adjustment, adjustment screw locks with the Screw tight.

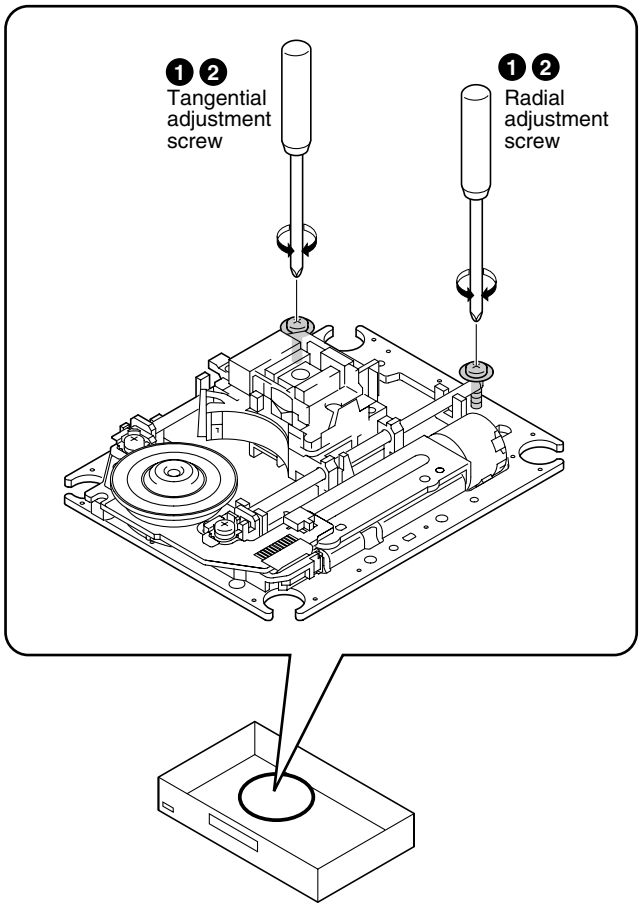

6.2 JIGS AND MEASURING INSTRUMENTS

⊕ Screwdriver (large)	⊕ Screwdriver (medium)	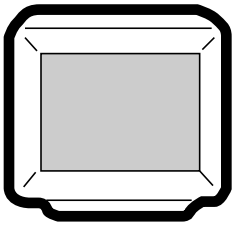 TV monitor	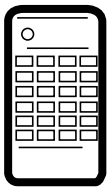 Test mode remote control unit (GGF1067)
⊕ Precise screwdriver	DVD test disc (GGV1025)	Screw tight (GYL1001)	

6.3 NECESSARY ADJUSTMENT POINTS

When	Adjustment Points	
■ Exchange Parts of Mechanism Assy		
Exchange the Pickup	Mechanical point	❶, ❷, ❸ ＊ After adjustment, screw locks with the Screw tight.
	Electric point	———
Exchange the Traverse Mechanism	Mechanical point	❸
	Electric point	———
Exchange the Spindle Motor	Mechanical point	❷, ❸ ＊ After adjustment, screw locks with the Screw tight.
	Electric point	———
■ Exchange PCB Assy		
Exchange PC Board LOAB, DVDM ASSY	Mechanical point	———
	Electric point	———

＊

Purpose: To set the sweep which was correct with the individual Traverse mechanism.

Be sure to perform the following step finally when replaced Pickup, Traverse Mechanism and Spindle Motor.

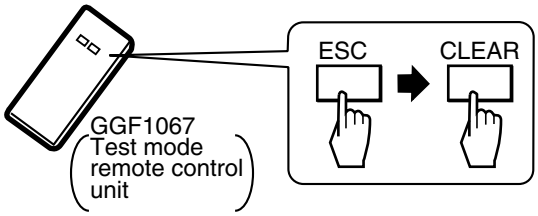

(It is necessary when performed adjustment procedure ❷.)

6.4 TEST MODE

TEST MODE: ON

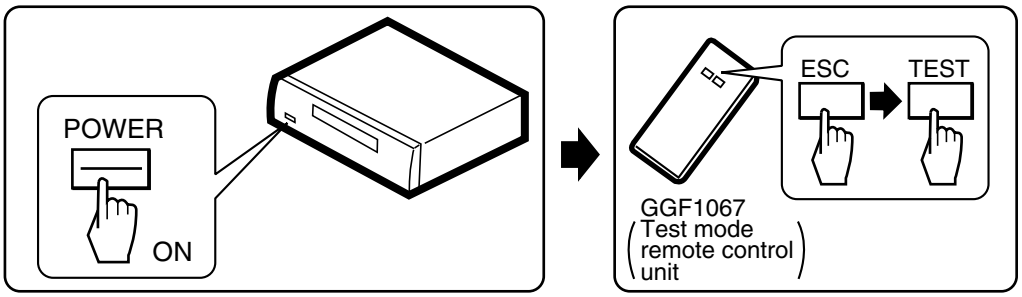

TEST MODE: DISC SET

<TRAY OPEN>

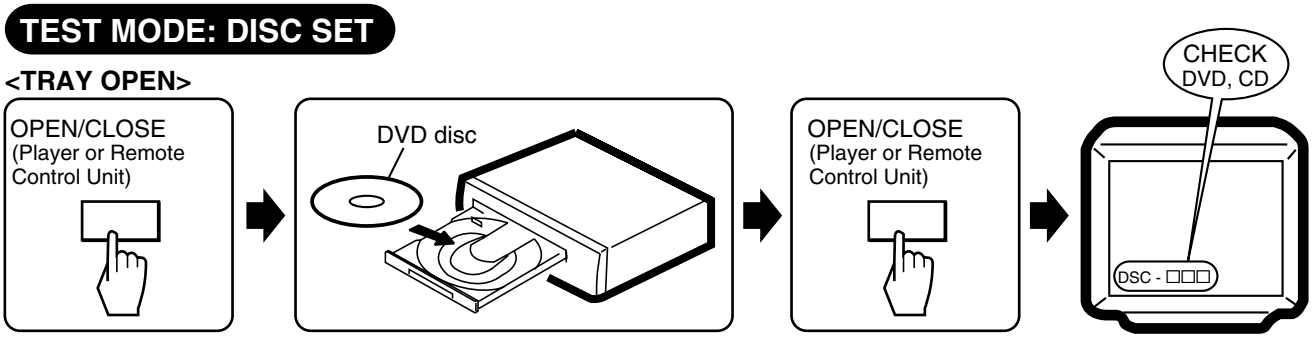

TEST MODE: PLAY

<PLAY>

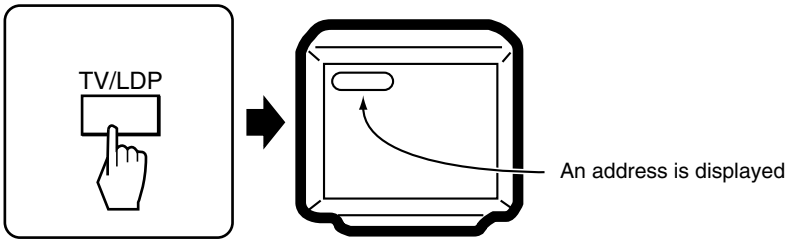

< When playback with the target address of disc (DVD)>

For example, when playback with # 30000

During PLAY [+10] ➡ [3] ➡ [0] ➡ [0] ➡ [0] ➡ [0] ➡ [CHP/TIM] Press keys in order

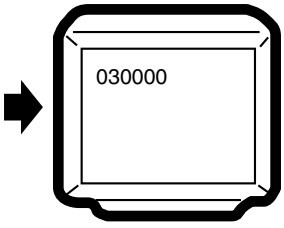

TEST MODE: OFF

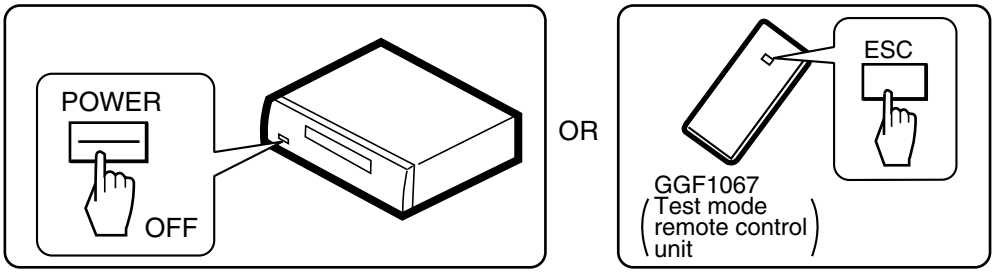

6.5 MECHANISM ADJUSTMENT

1 Tangential and Radial Height Coarse Adjustment

START

- Remove the servo mechanism.
- Remove a Spacer for height adjustment attached to the back side (shaded area) of the Servo Mechanism (Float Base) with nippers.

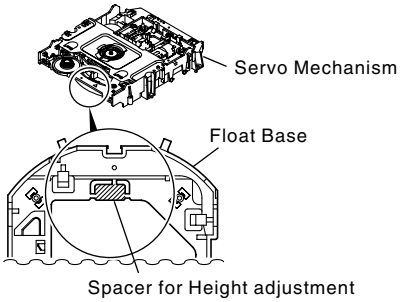

Note:
Turn the Short switch to Short side when removing the Pickup Flexible Cable. (Refer to "7.1.9 DISASSEBLY".)

Cautions:
Because there is not a Spacer for height adjustment in adjustment after the second time, will keep it at need. (This parts is Traverse mechanism exclusive use of a model for 2001 years)

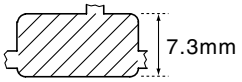

Put a spacer between a Tangential (or Radial) adjustment screw and Mechanism Base and turn each screw to adjust the height. (Refer to "6.1 ADJUSTMENT ITEMS AND LOCATION".)

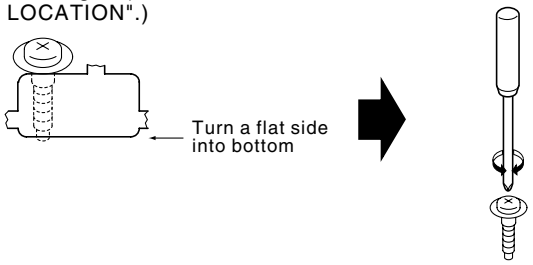

❷ DVD Jitter Adjustment

- Playback method of inner and outer address for the purpose is refererd to "6.4 TEST MODE".
- Jitter indication of the monitor is refererd to "7.1.3 TEST MODE SCREEN DISPLAY".

Use disc: GGV1025

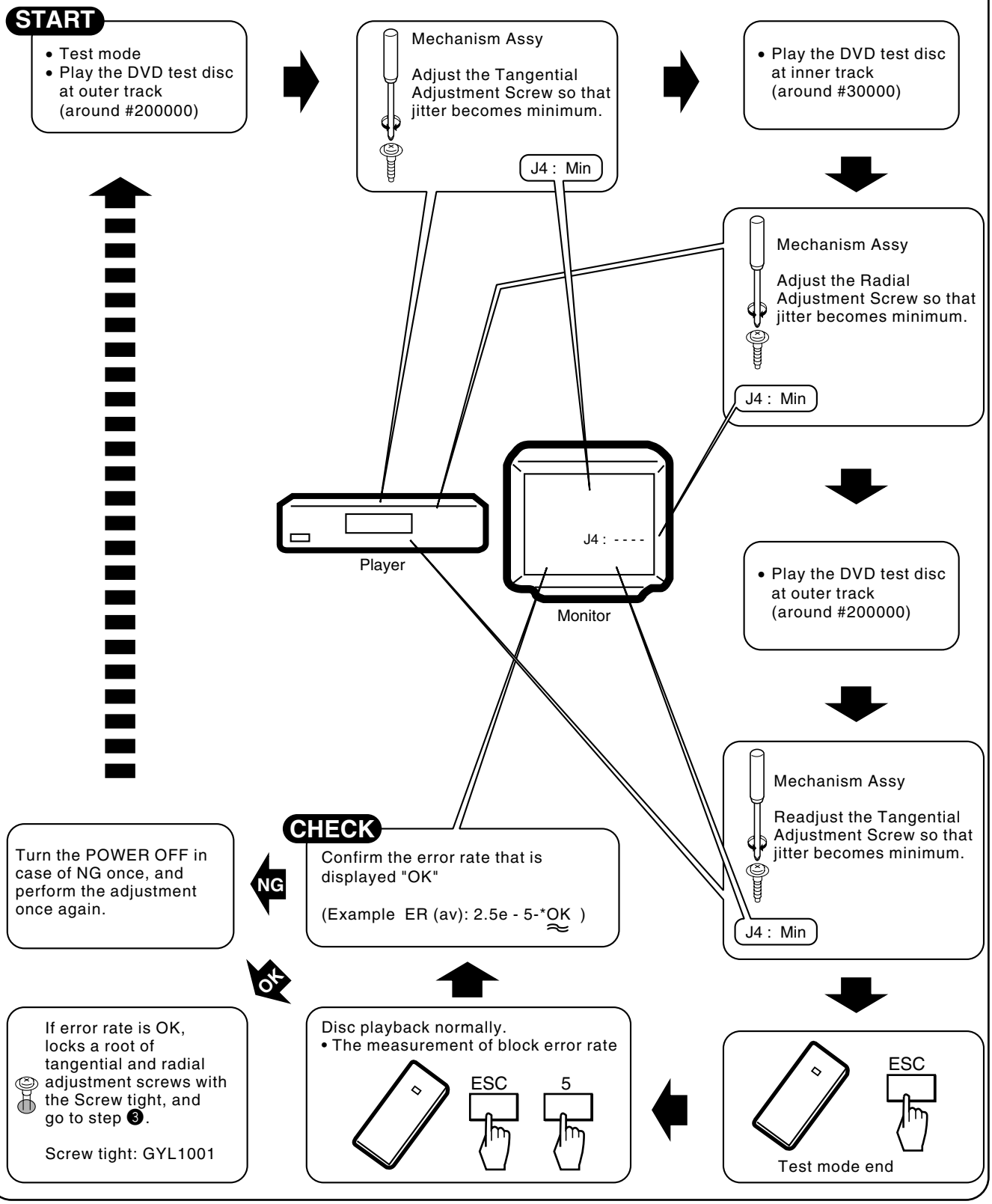

❸ Initialize the Focus Sweep Setting

Purpose: To set the sweep which was correct with the individual Traverse mechanism.

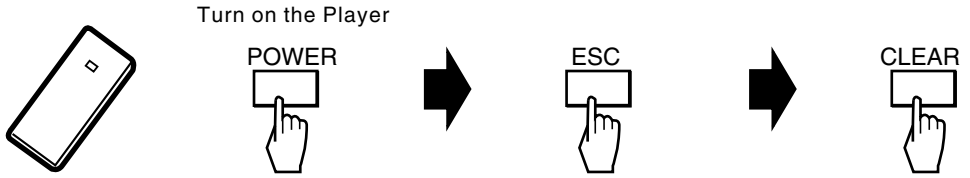

Note: Be sure to perform this step when replaced the Pickup or Traverse mechanism.

7. GENERAL INFORMATION

7.1 DIAGNOSIS

7.1.1 ID NUMBER AND ID DATA SETTTING

Entering the ID Number and ID Data for Players with DVD-Audio and DVD-RW Compatibility

It is necessary for a player with DVD-audio and DVD-RW compatibility to set an individual number (ID number) and ID data. If the number and data are not set correctly with the following procedure, operations in the future may not be guaranteed. You will find the ID number to be set on the yellow label on the rear panel.

Important: If no yellow label is found on the rear panel, write down the specified ID number by checking it according to "How to confirm the ID number" shown below.

The Input is Necessary When:

- Downloading FLASH-ROM is finished. (The latest version must be downloaded when a repair is made.)
- "No ID Number" is displayed on the screen or FL display immediately after the power is turned on or in Stop mode.
- If "No ID DATA" is displayed, the ID data must be entered.

Note:
Be sure to enter the ID number in Stop mode.
Use the service remote control (GGF1067) for operations. Only opening/closing of the tray are performed from the player.
Use Disc No. : GGV1084

How to Input the ID Number and ID Data

① To enter the input mode, press ESC + STEREO in a status with no ID number set, such as after FLASH-ROM downloading.

② As number input is enabled when the unit enters the input mode, input the 9-digit ID number.
(The entered number is also displayed on the FL display.)

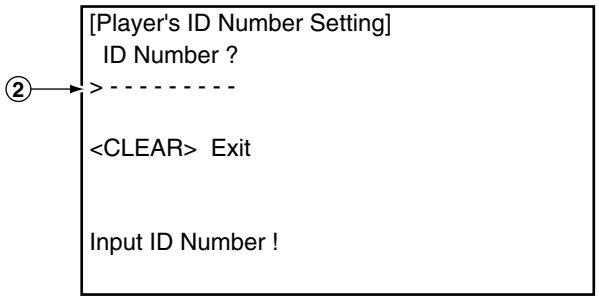

③ After inputting the number, press SEARCH to register the ID number.

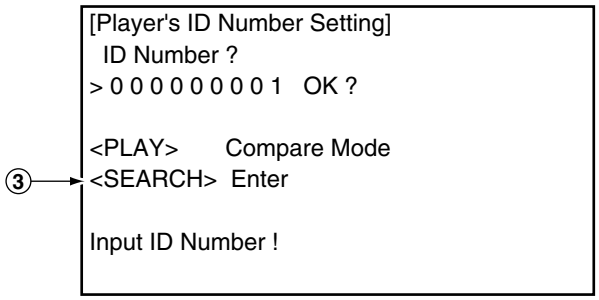

④ When the ID number has been registered, the unit enters the ID data input mode. (The FL display indicates "NO ID DATA.") In this condition, place the ID data disc on the tray and close the tray using the CLOSE key "■/⏏" on the player.

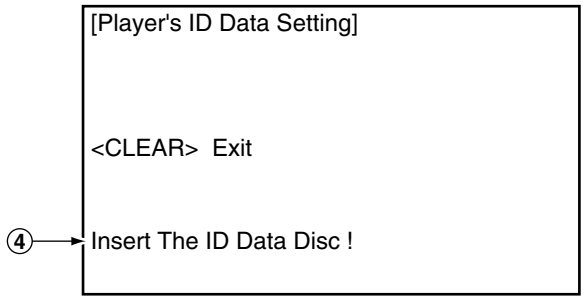

⑤ While the data are being read, the message shown in the figure at left is displayed on the screen.
(The FL display indicates "RD ID DATA.")

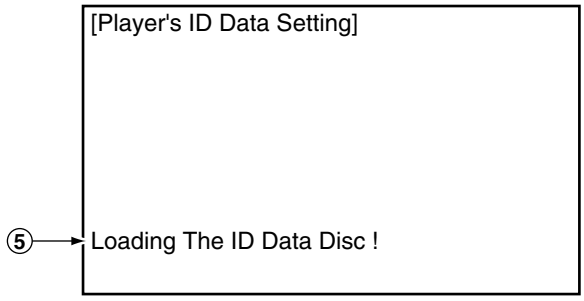

⑥ When the ID data have been read, the data are written to the FLASH-ROM.
(The FL display indicates "WR ID DATA.")

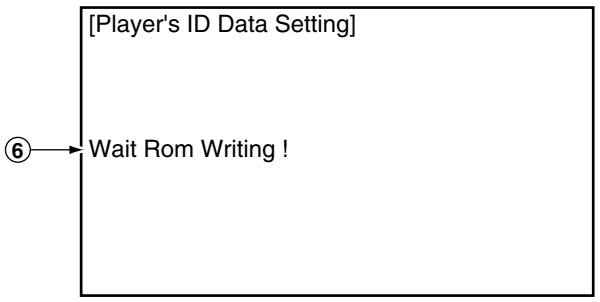

⑦ When the ID data have been written to the FLASH-ROM, the message "Rom Write OK" is displayed on the screen.
(The FL display indicates "ID DATA OK.")

⑧ After confirming this message, press CLEAR to exit the input mode.

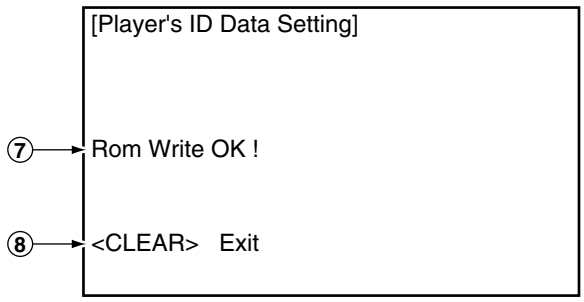

How to Confirm the ID Number

① Press ESC + STEREO with an ID number set, and the unit enters the ID number confirmation mode.

② The set ID number is displayed on the screen (and on the FL display), permitting you to confirm it.

③ To exit this mode, press CLEAR.

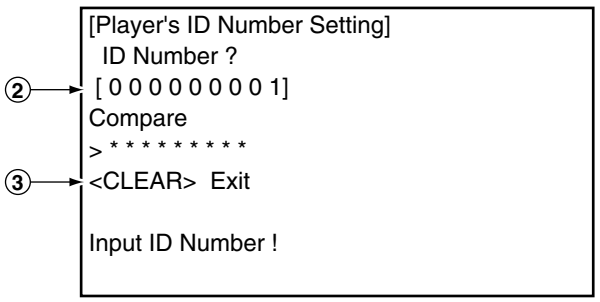

How to Clear the ID Number

① Press ESC + STEREO with an ID number set, and the unit enters the ID number confirmation mode.

② Input the same number as the ID number you have set.

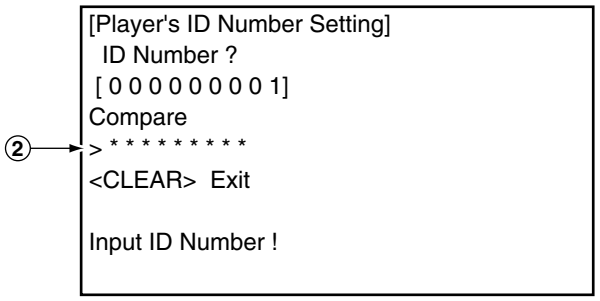

③ After inputting the number, press STOP.
Only when the entered number matches the set ID number, the ID number is cleared and the unit exits this mode.
If the numbers do not match, you must return to step 2.
(STOP is not accepted until 9 digits are entered.)

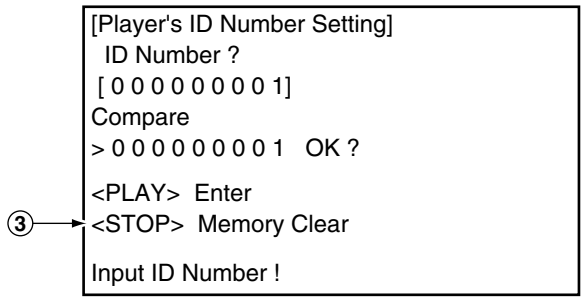

7.1.2 SELF-DIAGNOSIS FUNCTION OF PICKUP DEFECTIVE

This unit can confirm the laser diode current value (DVD: 650nm, CD: 780nm) of pickup on the Test Mode screen.
(Press the [ESC] → [TEST] keys in order on the test mode remote control unit (GGF1067) to enter the test mode.)

It's effective in case of the following condition.

Symptom

- Indicates "No Disc" in FL display.
- Player does not playback, etc..

Procedure of Self-Diagnosis

① Enter the Test mode.

② When diagnosing the 650nm laser diode:
Press the [TEST] → [1] keys in order, and turn on the laser diode (It light-up for nine seconds.).
When diagnosing the 780nm laser diode:
Press the [TEST] → [4] keys in order, and turn on the laser diode (It light-up for nine seconds.).

(When let it turn on once again after performed ② once,
After pressed [REP.B] key once
650nm: Press the [TEST] → [1] keys in order
780nm: Press the [TEST] → [4] keys in order)

③ Confirm the indicated value of the laser diode current (LDI). (Refer to following figure.)

④ **When indicated value is more than 100, pickup is defective. → Replacement is necessary**
Replace the Traverse Mechanism Assy or Pickup.

Note : When a DVD disc or a CD disc is played in the test mode, this function is effective.

Character in bold : Item name
□: Information display

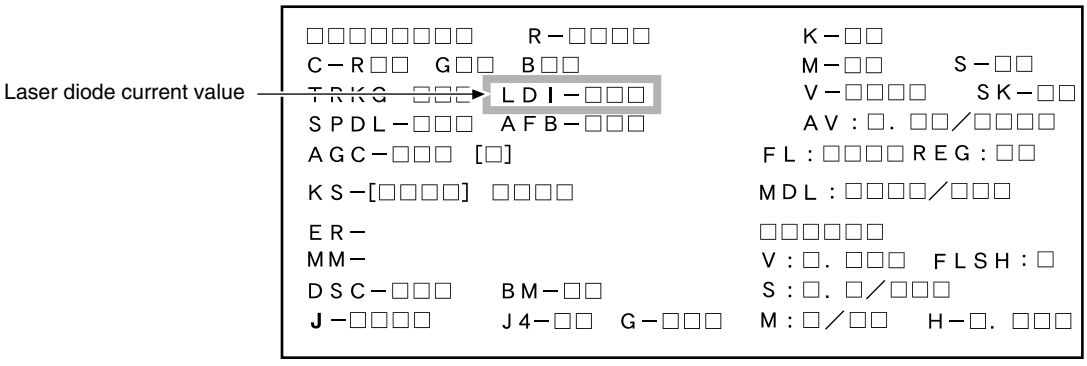

7.1.3 TEST MODE SCREEN DISPLAY

■ Display Specification of the Test Mode

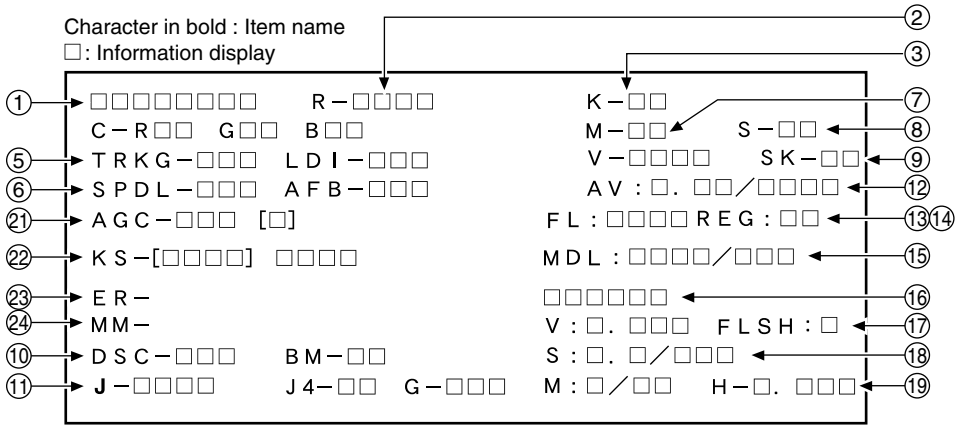

① **Address indication**
The address being traced is displayed in number.
(as for the DVD, indication of decimal number is possible.)
DVD : ID indication (hexadecimal number, 8 digits)
[＊＊＊＊＊＊＊＊]
CD : A-TIME (min. sec.) [0 0 0 0 ＊＊＊＊]

② **Code indication of remote control unit [R – ＊＊＊＊]**
In case of double code, display a 2nd code.

③ **Main unit keycode indication [K – ＊＊]**

④ **Background color indication [C – R＊＊ G＊＊ B＊＊]**

⑤ **(1) Tracking status [TRKG – ＊＊＊]**
Tracking on : [ON]
Tracking off : [OFF]
(2) Laser diode current value [LDI – ＊＊＊]

⑥ **(1) Spindle status [SPDL – ＊＊＊]**

Spindle accelerator and brake, free-runnimg	[A/B]
FG servo	[FG]
Rough, velocity phase servo	[SRV]
Offset addition, rough, velocity phase servo	[O_S]

(2) AFB status [AFB – ＊＊]

ON	[ON]
OFF	[OFF]

⑦ **Mechanism (loading) position value [M – ＊＊]**
Unknown : [01] or [41]
Open state : [04]
Close state : [08]
During opening : [12]
During closing : [22]

⑧ **Slider position [S – ＊＊＊＊]**
CD TOC area : [IN]
CD active area : [CD]

⑨ **Output video system [V – ＊＊＊＊]**
NTSC system : [NTSC]
PAL system : [PAL]
Automatic setting : [AUTO]
Scart terminal output [SK – ＊＊]
(Display only the WY model which can do the output setting of scart terminal.)
VIDEO : [00]
S-VIDEO : [01]
RGB : [02]

⑩ **(1) Disc sensing [DSC – ＊＊＊]**
The type of discs loaded is displayed.
[DVD], [CD], [VCD], [ ]
(2) CD 1/3 beam switch [BM – ＊＊]

⑪ **Jitter value [J – ＊＊＊＊]**
Make the jitter four times, and renew it in every 0.5 second.
[J4 – ＊＊]

⑫ **Version of the AV-1 chip / version of firmware [AV: ＊＊ / ＊＊＊＊＊＊＊＊]**

⑬ **Version of the FL controller [FL: ＊＊＊＊]**

⑭ **Region setting of the player [REG: ＊]**
Setting value : [1] to [6]

⑮ **Destination setting of the FL controller [MDL: ＊＊＊＊ / ＊＊＊]**
Four characters in the front represent the type of model.
Three characters in the back represent the destination code.
J: /J, K: /KU, /KC, /KU/KC, R: /RAM/RL/RD, LB: /LB, WY: /WY

⑯ **Part number of the flash ROM and system controller [＊＊＊＊＊＊ / ＊＊＊＊＊＊]**

⑰ **Version of the flash ROM [V: ＊. ＊＊＊]**
Flash ROM size [FLSH = ＊]

⑱ **Revision of the system controller [S: ＊ . ＊ / ＊＊＊]**

⑲ **(1) Revision of the DVD mechanism controller [M: ＊/＊＊]**
(2) Part number of the GUI-ROM (OEM model) [GUI: ＊＊＊]
(3) HOST conversion [HOST: ＊＊＊]

㉑ **AGC setting [AGC – ＊＊＊ [＊]]**
AGC on : [AGC-ON]
AGC off : [AGC-OFF]
[1] : RFAGC on [0] : RFAGC off

㉒ **FTS servo IC information**
DSP coefficient indication [KS – [＊＊＊＊] ＊＊＊＊]
Displays the address (four digits) of the specified coefficient and the setting value (four digits) with [TEST] and [9] keys.

㉓ **Error rate indication**
① C1 error value of CD [ER – C1 ＊＊＊＊]
② C1 error value of DVD [ER – ＊＊＊＊ ＊＊＊＊]

㉔ **Internal operation mode of mechanism controller [MM – ＊＊ : ＊＊]**
Internal mechanism mode (2 digits) and internal mechanism step (2 digits) of the mechanism controller

7.1.4 SELF-DIAGNOSIS FUNCTION

When enter the service mode, self diagnosis mode operates with the "ESC"+"CHP/TIM" keys automatically.

① Mechanism Error History (past eight times of error is displayed)

Two columns of the beginning display the error status for mechanism controller.
(the details of error contents refer to "7.1.4 Error Display".)
Eight columns of the back display the count UP value (turned count up every 20msec) from the power-up.
Example) 32h ≒ 1 sec, BB8h ≒ 1 min, 2BF20h ≒ 1 hour
In addition, when there was error after power-up immediately (till initial setting is completed), turn the most significant bit to ON.

② Check Item Display of Self Diagnosis Function

a) AV1 Host Bus check (possible the check only during stop) (Read & Write process of an internal specific register)
AV_1 : OK
: —— ⇒ not yet check
: HOST BUS NG ⇒ HOST bus NG

b) Bus check between AV1 SDRAM (possible the check only during stop) (Read & Write process to the SDRAM)
AV_2 : OK
: —— ⇒ not yet check
: AV1-SDRAM BUS NG ⇒ Bus NG between AV1 and SDRAM

c) DMA transfer port check from F.E. to AV1 (during stop, possible the check only in DVD or NO DISC)
(writing from F.E to SDRAM and reading of SDRAM)
AV_3 : OK
: —— ⇒ not yet check
: FE-AV1 DMA NG ⇒ Bus NG between F.E and SDRAM installed outside of AV1

d) Video encoder (ADV****) check (Read of the specific register)
VE : OK
: NG ADV, ⇒ ADV register reading NG
: NG > ADV, ⇒ ADV communication NG of FR to video encoder
: NG > PRO ⇒ Communication NG from EBY to progressive decoder

e) DSP check (Read of the specific register)
DSP : OK
: NG ⇒ DASP NG

f) SACD check (Read of the specific register)
SACD : OK
: NG ⇒ SACD NG

g) 1394 relation HOST controller check
HOST : OK
: NG ⇒ HOST controller NG

h) 1394 relation Mercury CHIP check
MERC : OK
: NG ⇒ Mercury CHIP NG

Display the mechanism error history and self diagnosis result by pressing the "CHP / TIM" key once again.
Afterwards press the "CHP / TIM" key with toggle and change the display.

Display screen of mechanism error history and self diagnosis result

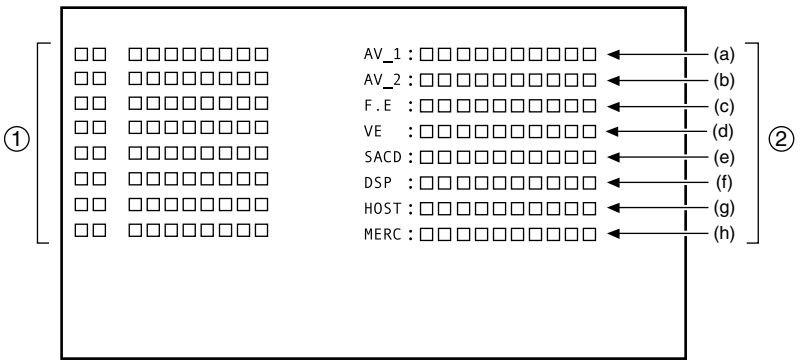

7.1.5 FUNCTION SPECIFICATION OF THE SERVICE MODE

• FL indication of EDC / ID error (short cut function)

Indicate it in FL with the "ESC"+"CX" keys (LD remote control unit).
Indication is released with the "ESC" key during display.

FL indication contents

00 / 00 / 01 ∗

Indicate number of the location that caused EDC and ID errors

Retry number of times at having caused ID error (error is indicated only in the occurring moment)
Retry number of times of the latest ID error in the ST system

Retry number of times at having caused EDC error (error is indicated only in the occurring moment)
Retry number of times of the latest EDC error in the ST system

∗ Mark: When even once causes AV1 error, lights.

• Screen display of the service mode

Indicate to the screen with the "ESC"+"CHP/TIM" keys.
Release the indication with the "ESC" key.
Indication contents

① ID Address

② DVD in playback: Error rate regular indication and exponent indication
CD/VCD in playback indicates the number of correct frame of C1 error /5 seconds.

③ Self diagnosis indication
Indicate the self diagnosis result whether the F.E is normal.
Self Check : During FE checks
Self Check OK : Abnormality is not found in F.E.
Self Check Error : Abnormality is found in F.E.
Indicate the mechanism error history and self diagnosis result by pressing the "CHP / TIM" key once again.
Afterwards press the "CHP / TIM" key with toggle and change the display.
Indication of the mechanism error history and self diagnosis result refer to "7.1.1 self diagnosis function".

④ Error information indication of the AV decoder
(a)
When a retry occurred in reading from the disc, a history indicates the occurrence location and the occurrence reason.
History is indicated to past seven times.
Eight columns of the beginning show the physical address which occurred of retry.
As for four columns of next, bitmap indicates EDC status. LSB shows the first sector during a block and MSB shows a last sector.
Following field indicates the retry number of times.
One digit in front of " / " shows number of times of the retry by EDC Error which occurred in the same block in succession.
One digit after " / " shows number of times of the retry by ID Check Error which occurred in the same block in succession.
" * " of last one digit shows the EDC Check NG Count Over.
" # " shows the ID Check NG Count Over.
When " * " and " # " are not indicated, show that data were rightly readable by retry process.
(b)
Indicate the error information that detected with the Audio/Video Decoder. When error occurred, a history indicates the occurrence time and the occurrence reason. History is indicated to past seven times.
Field in front of ":" indicates the error information of Audio/Video Decoder.
(Indication information is different from Fujitsu Decoder with Mitsubishi Decoder)
02 model is 656 series and 757 series is Mitsubishi model.

• Specification for the Audio/Video Decoder (M65773FP) model of Mitsubishi
bit7: VLD Fatal Error detection
bit6: VLD Not Fatal Error detection
bit5: Number of Macro Block mismatch
bit4: Decode error
bit3: VLD Sequence Layer Fatal Error detection
bit2: VLD Picture Layer Fatal Error detection
bit1: VLD Slice Layer Fatal Error detection
bit0: Start-up Sequence Time-out Error detection
Following field in " : " indicates a value of STC (System Time Clock) which detected the above Audio/Video Decoder error.

∗ When often perform the switch of debug screen, an error history will be increased.
As for this, CPU power is used for update of OSD drawing, symptoms occur so that control of VBR Buffer is not in time.

Indication contents

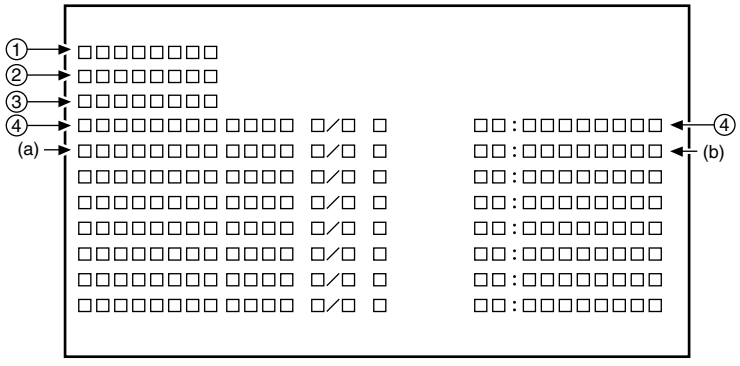

7.1.6 ERROR DISPLAY

Error codes that are displayed on the FL display without using the remote control unit

FL Display	Possible causes	Operation of the unit
AV1 VER	AV-1 chip is not a match with the program of system controller	The sound may not out with the specific audio.
CPU AERR	CPU address error (Hardware is unusual.)	No operation
DMA AERR	DMA address error (Hardware is unusual.)	No operation
FLASH ID	Difference in versions of the internal ROM of the system controller and of the flash ROM, or bus line failure or reverse installation	No operation
FLASH WRP	Write protect error of the flash ROM	No operation
FLASH SIG	Difference in part number of the flash ROM (When the ROM which could't be used was used.)	No operation
FLASH SUM	Check sum error of the flash ROM (It exceeds the regular size.) or reverse installation (Hardware is unusual.)	No operation
FLASH SIZ	Size error of the flash ROM (Use 4 or 8 M-bit.)	No operation
GUI ROM ERROR	Difference in version of GUI ROM and system controller software.	Operate as the OSD model
ILLGAL	The system controller fetched a code other than an operation code (Hardware is unusual.)	No operation
MECHA CPU	Difference in version of the internal ROM of the mechanism controller and of the flash ROM.	No operation
RESERVE	Undefined interrupt (Hardware is unusual.)	No operation
SLOT	Inappropriate slot command issued (Hardware is unusual.)	No operation

Error codes that are displayed on the FL display by using the remote control unit (Mechanism controller error)

To display: ESC + DISPLAY + DISPLAY; Location of the display: At the two digits of center of the FL display
To display the error history: ESC + DISPLAY + One shot; Location of the display: TV screen

FL	Description of Error	Causes if with a DVD	Causes if with a CD	Operation of the Unit
11	Search timeout	Search could not be complete within 7 seconds.	Search could not be complete within 7 seconds, and it could not enter the target area within 7 seconds by VCD scan.	CD : Stops, DVD: Continues operation
12	Search retry error	More beyond the target while the read-in search was converging. A search could not be completed after 3 retries while the unit was tracing 11 tracks. A search could not be completed after retry when timeout occurs at read-in.		CD: Stops, DVD: Continues operation
19	Tracing timeout while converging	Timeout (10.5 seconds) while tracing at the stage of convergence of a search.		Stop
1B	Index 0 search error		During Track (Index) Search, the search for the beginning of a program could not be completed within 3 seconds (20 seconds in the case of Index Search) after positioning based on the TOC data was completed.	Stop
1C	Embossment plunge error (only a model corresponding to RW)	Plunged into unreadable embossment of DVD-RW player.		1. In wobble nothing (error distinction) : search to address 2E400h 2. In wobble existence: Tray open
22	Timeout of slider inner circumference	Inside switch could not ON within 3 seconds.		Stop
23	Timeout of slider outer circumference	Inside switch could not OFF within the following times: at ATB: 2 seconds, at Backup: 2 or 2.02 seconds.		Stop
33	No FOK pulse during playback	When the focus was deviated continuously 20 times.		Adjusts focus at the innermost circumference and tries to return to its position where the error was generated (for 3 times),then opens. If the same error persists after one retry, the tray opens. (No FOK pulse)
38	Disc-type-sensing error	Were not able to playback from the disc distinction process. PLAY or STOP was not completed by backup operation of the disc distinction. Distinguished it from the blank disc in the ATB process completion.		Open

FL	Description of Error	Causes if with a DVD	Causes if with a CD	Operation of the Unit
39	SGC converge timeout	SGC could not converge during detects the peak		Open
41	Spindle timeout	The unit did not enter Stop mode within 10 seconds of issuance of a Stop command. Disc distinction is not completed even if passes for 10 seconds after the spindle turned.		Stop
48	Spindle FG transition timeout	Did not reach to the rotating speed that ATB was possible for less than 10 seconds. Did not reach aim CAV lock speed (high: 10%, low: 50%) for less than 10 seconds. CAV process passed more than 5 seconds or abnormal speed was detected. Spindle does not lock for less than 3 seconds in the BCA read start or end.		Stops. (FG timeout)
49	Spindle PLL transition timeout	CAV process passed more than 5 seconds. Abnormal speed was detected.		Stops. ("73" is displayed during starting process.)
4A	Spindle lock timeout	Spindle could not lock more than 1.5 seconds before start the AFB.		Stops. ("73" is displayed during starting process.)
51	Auto sequence timeout of peak detection	ABUSY did not return within 1 second after the DDTCT (peak detection) command was sent.		Stop
52	Auto sequence timeout of focus jump down	ABUSY did not return within 30 mS after the FJMPD (Focus jump 1 to 0) command was sent.		Open
53	Auto sequence timeout of focus jump up	ABUSY did not return within 30 mS after the FJMPU (Focus jump 0 to 1) command was sent.		Open
54	Auto sequence timeout of play AGC	ABUSY did not return within 50 mS after the GSUMON (play-AGC-measuring) command was sent.		Stop
55	Auto sequence timeout of disc-type-sensing	ABUSY did not return within 2 seconds after the DJSRT (disc-sensing) command was sent.		Stop
56	Auto sequence timeout of ATB2	ABUSY did not return within 1 second after the TBLOFS (Internal ATB after the completion of external ATB) command was sent.		Stop
57	Auto sequence timeout of tracking servo ON	ABUSY did not return within 0.5 sec. after the TSON (tracking servo ON) command was sent.		Stop
58	Auto sequence timeout of ATB1	ABUSY did not return within 0.2 sec. after the TBL (external ATB) command was sent.		Stop
59	Auto sequence timeout of focus gain adjustment	ABUSY did not return within 2 seconds after the FGN (focus gain adjustment) command was sent.		Stop
5A	Auto sequence timeout of tracking gain adjustment	ABUSY did not return within 2 seconds after TGN (tracking gain adjustment) command was sent.		Stop
5B	Auto sequence timeout of offset adjustment	ABUSY did not return within 1 second after the AVE (offset adjustment) command was sent.		Stop
5C	Auto sequence timeout of modulation factor measurement	ABUSY did not return within 200 mS after the ADJMIR (modulation factor measurement) command was sent.		Stop
5D	Auto sequence timeout of auto focus bias	ABUSY did not return within 2 seconds after the AFB (auto focus bias) command was sent.		Stop
5F	Auto sequence already busy	A command could not be sent because ABUSY was low. ABUSY did not return within 200 mS after TLV command was sent.		Stop
62	Pause retry error	Pause mode could not be restored within three retries after it had been released.		Continues operation
71	ID reading check during playback	An ID could not be read for 1 second or more.		Stop
72	Subcode check failure during playback		No frame could be read for 3 seconds or more.	Stop
73	ID can not read during startup	An ID could not be read within 1 second after the AFB tracking on.		Opens (ID readout failure)

FL	Description of Error	Causes if with a DVD	Causes if with a CD	Operation of the Unit
74	Subcode check failure during startup		Subcode could not be read within 1 second after the tracking on.	Opens (Subcode readout failure).
A1	Communication timeout of DSP command	A command could not be issued to DSP because Command Busy (XCBUSY) was in force (XCBUSY = L) for a specified time (about 200 µS).		Open
A2	Communication timeout for reading DSP coefficient	Command Busy (XCBUSY) was in force for a specified time (about 200 µS) before and after a coefficient read command was issued to DSP, or the address echo-back after command issuance did not match the setup address.		Open
A4	Communication timeout for continuously writing DSP coefficient	Command Busy (XCBUSY) was in force for 200 µS during continuous coefficient writing, or before and after a continuous write command was issued to DSP.		Open
B1	Timeout error for backup	In the backup sequence, codes could not be read for fixed time.		Stops
B2	Retry error for backup	Cannot close tracking even if performs backup fixed number of times.		Stops
B3	Retry error for trace	During tracing, do not restore after the runaway detection backup was performed several times.		Stops
C3	Detection of tracking overcurrent	During playback, the overcurrent detection port was at L for 300 ms or more continuously.		Stops (the mechanical controller operates independently).
(C5)	Short-circuit test corresponding error	After the overcurrent detection (C3 error), furthermore the overcurrent detection port was at L for 300 mS or more continuously.		Turns off the power instantly (No indication on the FL display and no writing to flash memory)
F5	Tray being pushed	The tray switch that had been Open mode was forcibly changed to a mode other than Open by an external force.		Closes
F6	Code reading NG		(PH code nothing) When Philips code is not readable during LD starting, and a code was not readable after the slider moved to FWD and REV directions slowly each for five seconds. (PRD) In the CD starting, when a subcode of TOC part was not readable, but the subcode of the program area was readable.	Search, scan and special playback prohibition, Playback as playback CD-R (PRD mode) as it is.
F8	Loading timeout	Loading or unloading could not be completed within a specified time (about 10 seconds). Though a portable cover is opening, when a close command was issued from the system controller.		Reverses the loading direction. It timeout is repeated upon retry, the unit stops.
FC	Focus	• Focus ON sequence could not be completed more than two seconds. • Auto sequence command was finished, actually focus ON was not completed. • Focus did not enter even if retried it eight times.		Stops wherever possible then opens (stops in the case of side B).

Error codes that are displayed on the FL display by using the remote control unit (Device error)

To display: ESC + DISPLAY + DISPLAY; Location of the display: At the two digits of left of the FL display

FL	Description of Error	Causes if with a DVD	Causes if with a CD	Operation of the Unit
bit4=1 10 etc.	Mechanism controller RAM check sum error			No operation or it becomes debugging indication if the power is able to ON.
bit3=1 08 etc.	AV1 access error (read, write NG)			
bit2=1 04 etc.	LSI11 access error			
bit0=1 01 etc.	SRAM access error			

7.1.7 TEST POINTS LOCATION & WAVEFORMS

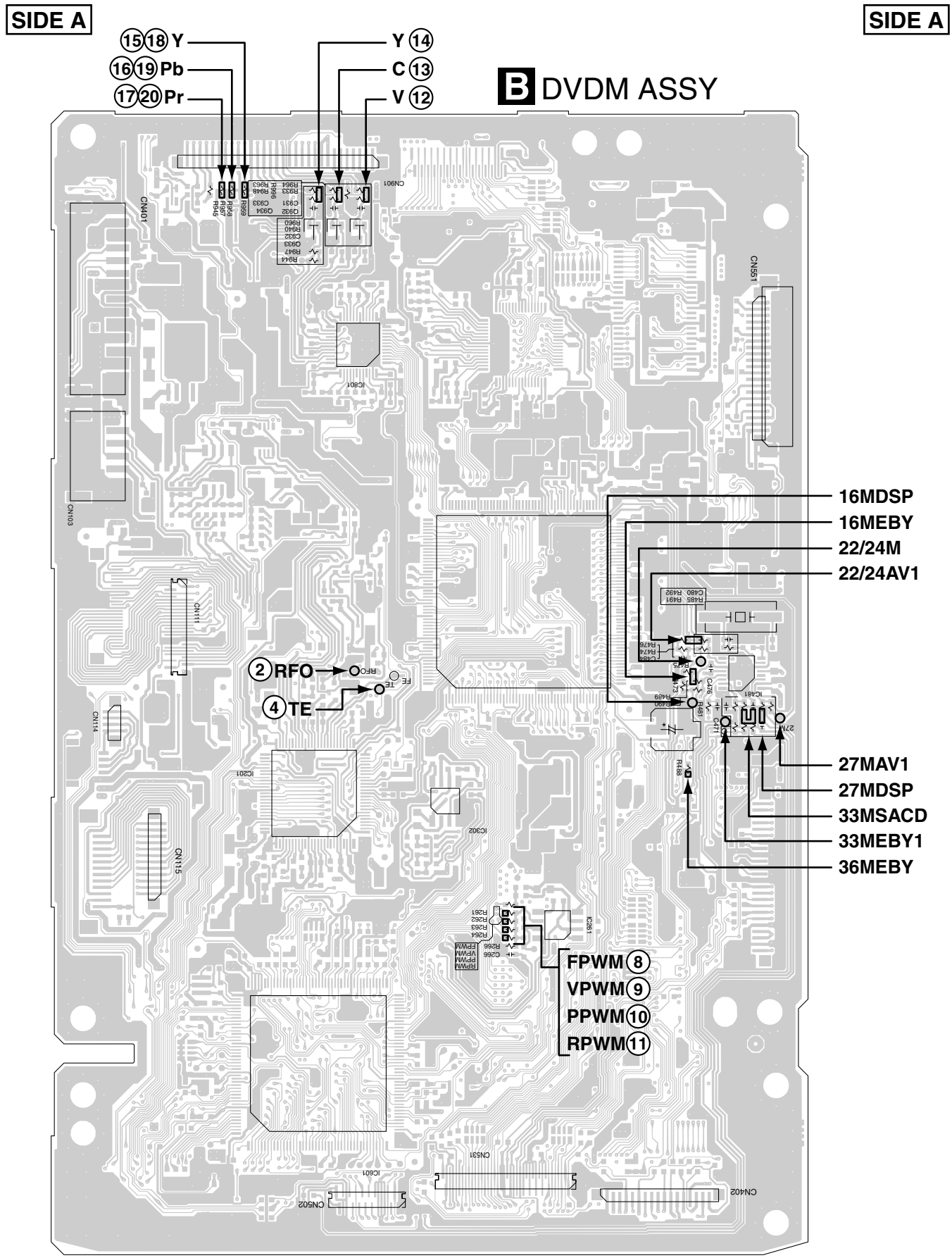

■ WAVEFORMS

Note : The encircled numbers denote measuring point in the schematic diagram.

B DVDM ASSY

Measurement condition : No. 2, 4 and 8 to 11 : MJK1, Title 1-chp 1

No. 12 to 14 : DVD-REF-A1, T2-Chap.1
No. 15 to 20 : DVD-REF-A1, T2-Chap.19

(2) Q106-emitter (RFO)
V: 500mV/div. H: 0.1µsec/div.

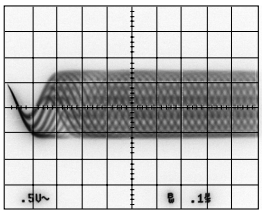

(8) Foot of R261 (FPWM)
V: 1V/div. H: 10µsec/div.

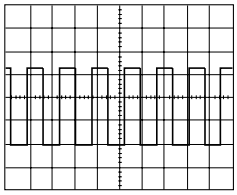

(13) Foot of R963 (C)
V: 0.2V/div. H: 10µsec/div.

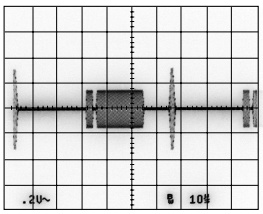

(19) Foot of R958 (Pb) Progressive
V: 0.2V/div. H: 10µsec/div.

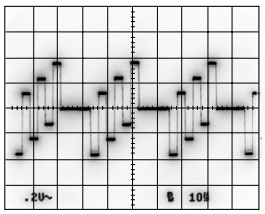

(14) Foot of R960 (Y)
V: 0.2V/div. H: 10µsec/div.

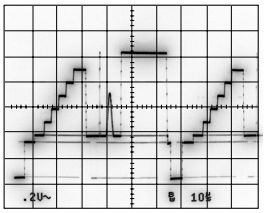

(20) Foot of R957 (Pr) Progressive
V: 0.2V/div. H: 10µsec/div.

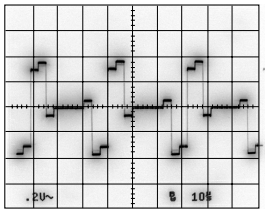

(9) Foot of R262 (VPWM)
V: 1V/div. H: 10µsec/div.

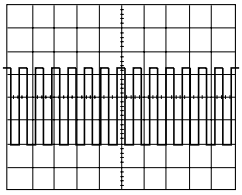

(15) Foot of R959 (Y)
V: 0.2V/div. H: 10µsec/div.

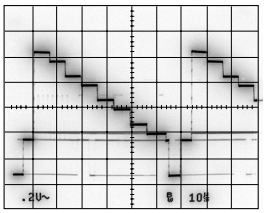

(4) IC101-pin 42 (Tracking Error) (AI-Inner Tracking Off)
V: 500mV/div. H: 2msec/div.

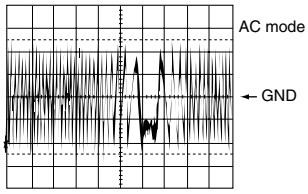

(10) Foot of R263 (PPWM)
V: 1V/div. H: 0.2msec/div.

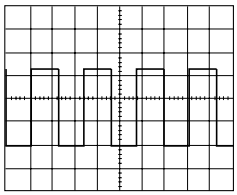

(16) Foot of R958 (Pb)
V: 0.2V/div. H: 10µsec/div.

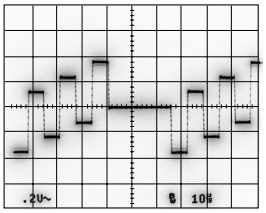

(11) Foot of R264 (RPWM)
V: 1V/div. H: 5msec/div.

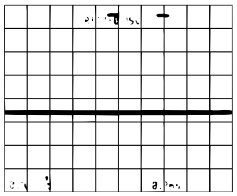

(17) Foot of R957 (Pr)
V: 0.2V/div. H: 10µsec/div.

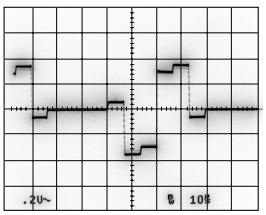

(12) Foot of R964 (V)
V: 0.2V/div. H: 10µsec/div.

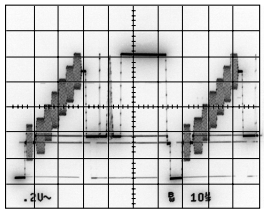

(18) Foot of R959 (Y) Progressive
V: 0.2V/div. H: 10µsec/div.

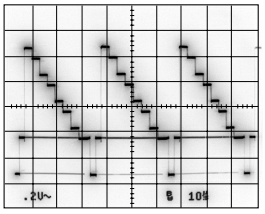

7.1.8 TROUBLE SHOOTING

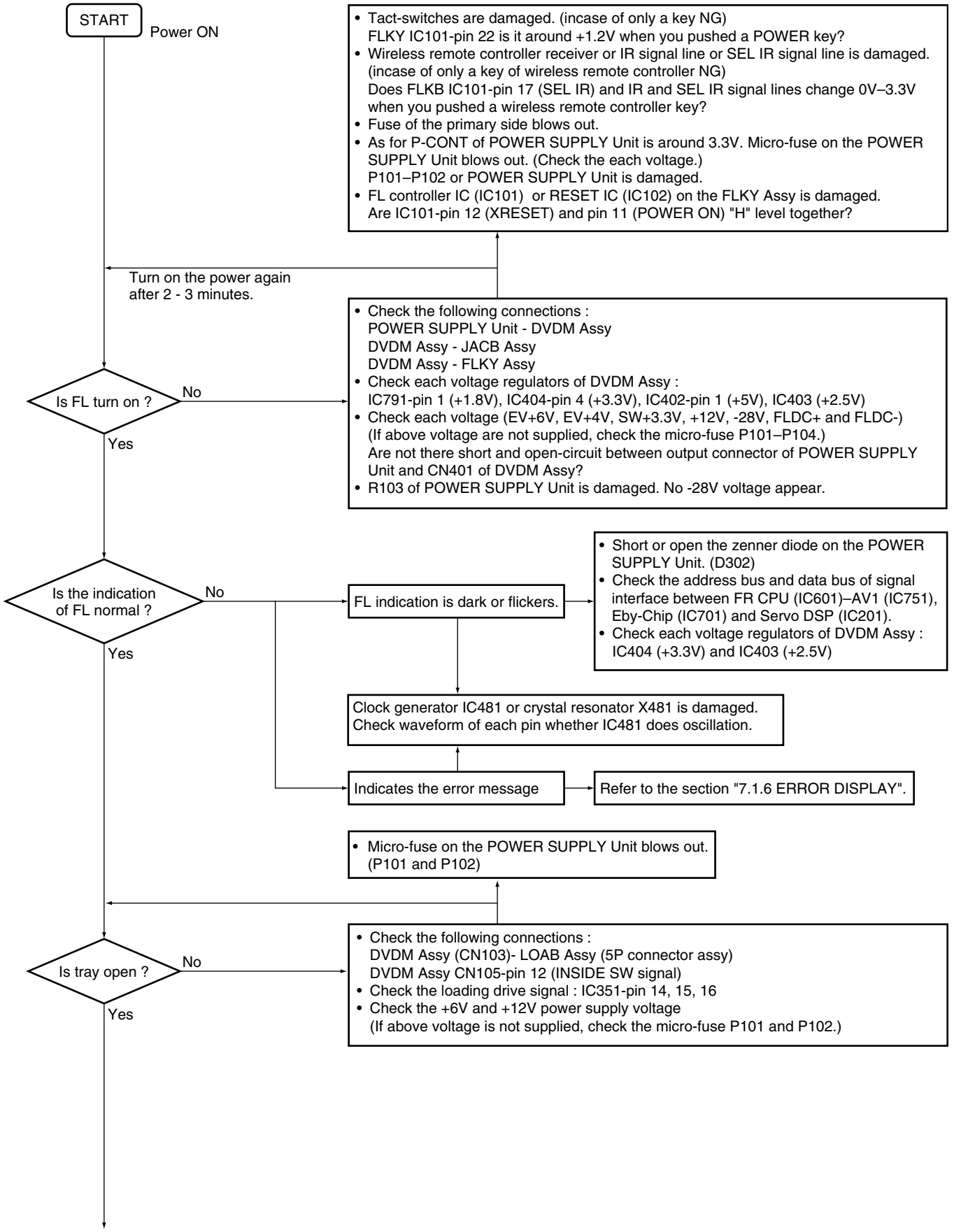

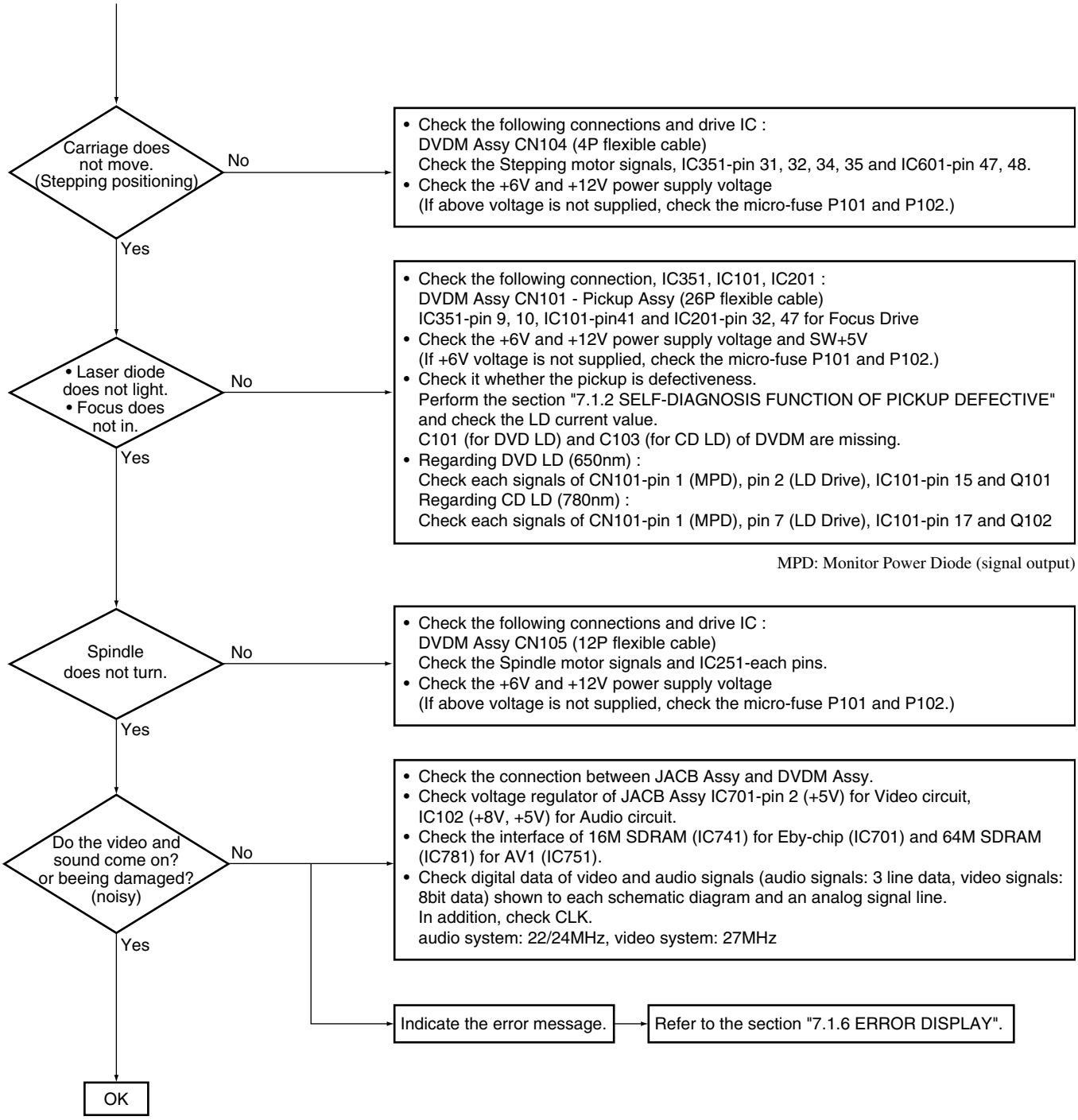
Carriage does not move. (Stepping positioning)
No
• Check the following connections and drive IC :
DVDM Assy CN104 (4P flexible cable)
Check the Stepping motor signals, IC351-pin 31, 32, 34, 35 and IC601-pin 47, 48.
• Check the +6V and +12V power supply voltage
(If above voltage is not supplied, check the micro-fuse P101 and P102.)
Yes
• Laser diode does not light.
• Focus does not in.
No
• Check the following connection, IC351, IC101, IC201 :
DVDM Assy CN101 - Pickup Assy (26P flexible cable)
IC351-pin 9, 10, IC101-pin41 and IC201-pin 32, 47 for Focus Drive
• Check the +6V and +12V power supply voltage and SW+5V
(If +6V voltage is not supplied, check the micro-fuse P101 and P102.)
• Check it whether the pickup is defectiveness.
Perform the section "7.1.2 SELF-DIAGNOSIS FUNCTION OF PICKUP DEFECTIVE" and check the LD current value.
C101 (for DVD LD) and C103 (for CD LD) of DVDM are missing.
• Regarding DVD LD (650nm) :
Check each signals of CN101-pin 1 (MPD), pin 2 (LD Drive), IC101-pin 15 and Q101
Regarding CD LD (780nm) :
Check each signals of CN101-pin 1 (MPD), pin 7 (LD Drive), IC101-pin 17 and Q102
Yes
MPD: Monitor Power Diode (signal output)
Spindle does not turn.
No
• Check the following connections and drive IC :
DVDM Assy CN105 (12P flexible cable)
Check the Spindle motor signals and IC251-each pins.
• Check the +6V and +12V power supply voltage
(If above voltage is not supplied, check the micro-fuse P101 and P102.)
Yes
Do the video and sound come on? or beeing damaged? (noisy)
No
• Check the connection between JACB Assy and DVDM Assy.
• Check voltage regulator of JACB Assy IC701-pin 2 (+5V) for Video circuit, IC102 (+8V, +5V) for Audio circuit.
• Check the interface of 16M SDRAM (IC741) for Eby-chip (IC701) and 64M SDRAM (IC781) for AV1 (IC751).
• Check digital data of video and audio signals (audio signals: 3 line data, video signals: 8bit data) shown to each schematic diagram and an analog signal line.
In addition, check CLK.
audio system: 22/24MHz, video system: 27MHz
Yes
Indicate the error message.
Refer to the section "7.1.6 ERROR DISPLAY".
OK

7.1.9 DISASSEMBLY

■ DIAGNOSIS OF PCBs

Note :

When diagnosing the unit, be sure to use two extension cables for service (Part No. : GGF1157, GGD1298) and a extension board for service (Part No. : GGF1430).

Caution: SCRB Assy is not got in a model of the following photographs.

1 Bonnet and Tray Panel

① Remove the Bonnet (Screws × 6).
② Turn power ON.
③ Open the Tray (⏏).
④ Remove the Tray Panel.

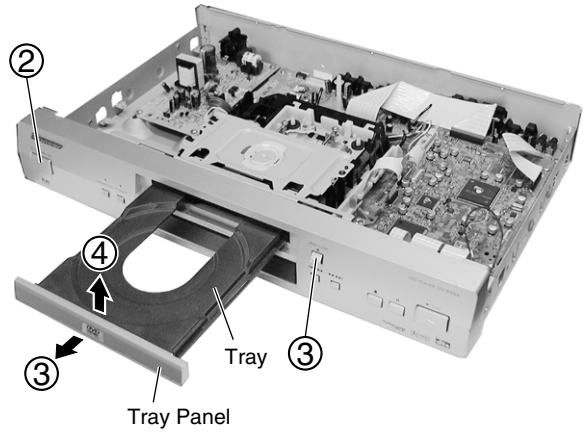

2 Test Disc Set

① Set the Test Disc.
② Close the Tray (⏏). → Clamp the Test Disc.
③ Turn power OFF.
④ Pull out the Power Cord from the outlet.

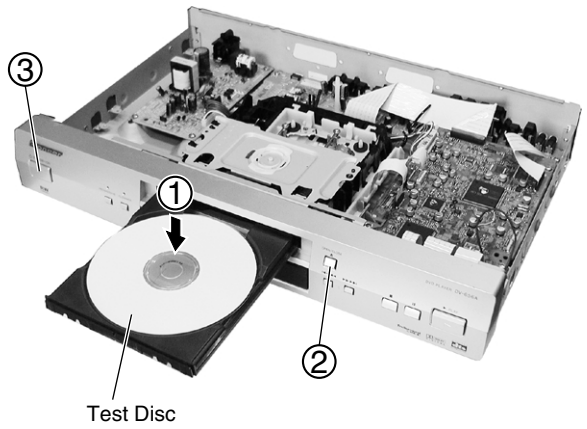

3 Front Panel

① Remove two Earth Lead Unit (Screws × 2).
② Unhook (× 6).
③ Release a Flexible Cable.
④ Remove the Front Panel.

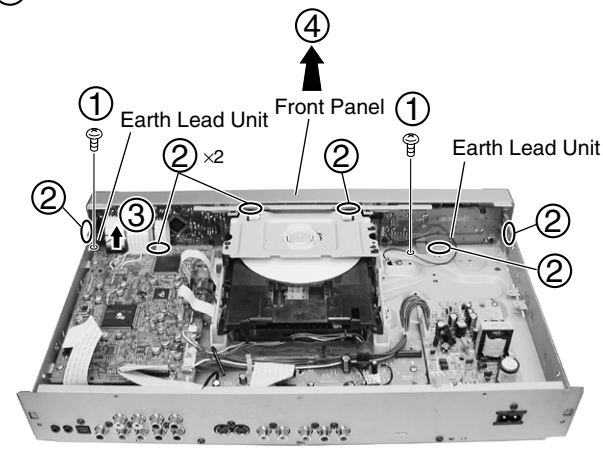

4 DVDM Assy

① Release three Flexible Cables.
② Remove two screws.
③ Release the PCB Support.
④ Remove the DVDM Assy.

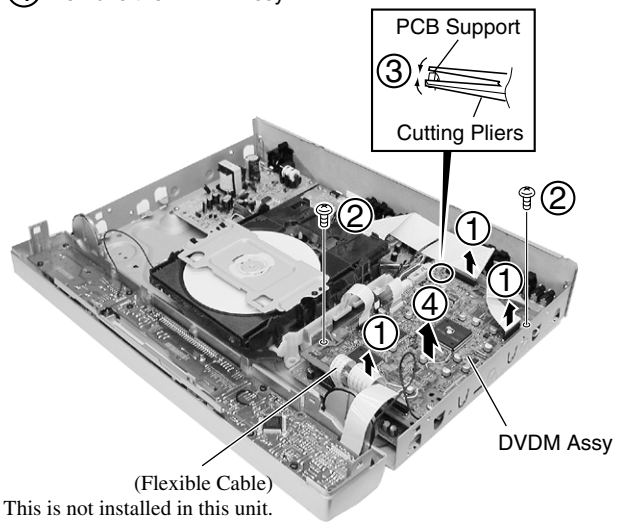

5 Diagnosis

① Stand the DVDM Assy as figure below.

② Connect two Extension Cables and a Extension Board as figure below.

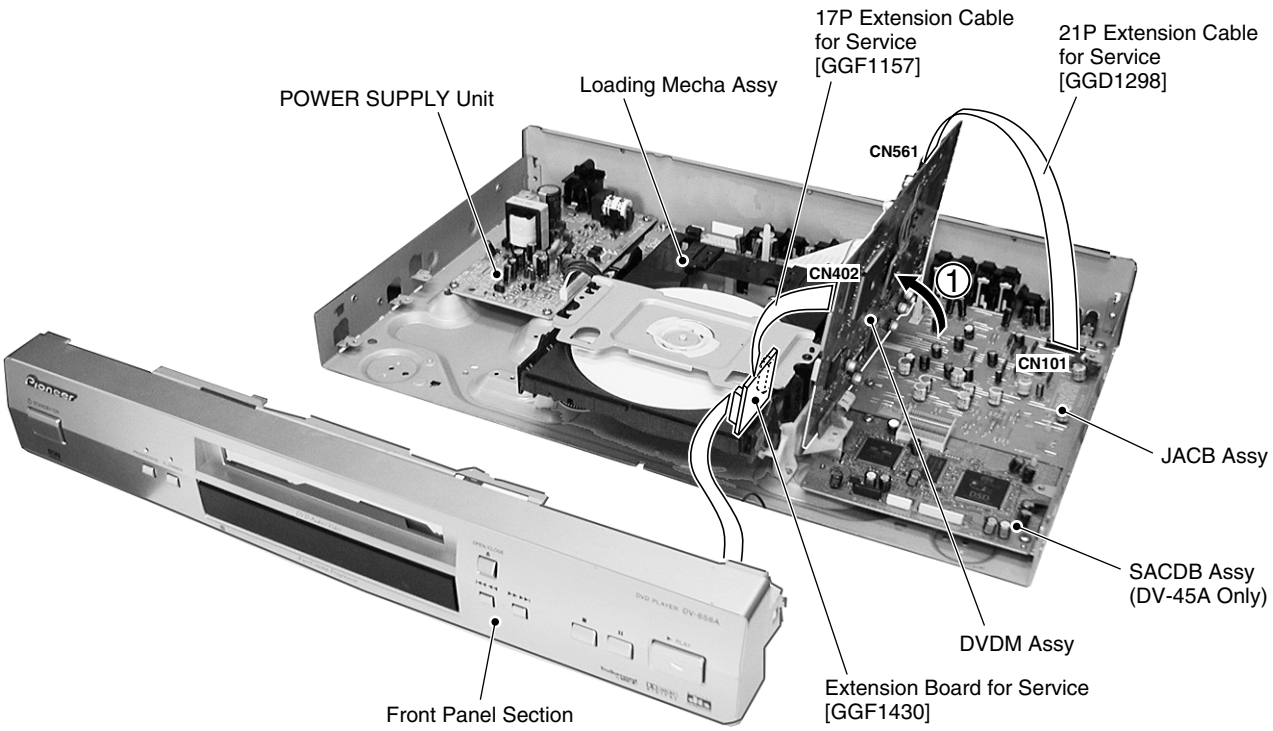

Diagnosis

☞ How to diagnose the SACD block of the SACDB Assy

① Remove a Board to Board connector CN102 (JACB) ↔ CN902 (SACDB) .

② Set the SACDB Assy as figure below.

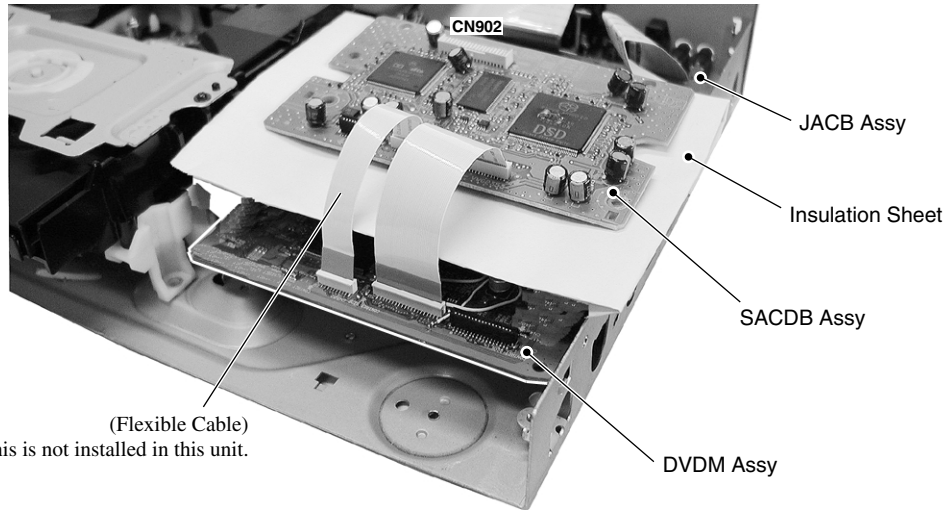

③ In this case an audio of SACD is not output from the Audio jack.
However, observe the signal waveform of CN902 on the SACDB Assy, and can confirm it.
CN902 - pin 2 (SACDSL), pin 4 (DSDBCK), pin 6 (DSD R), pin 8 (DSD L),
pin 10 (DSD Rs), pin 12 (DSD Ls), pin 14 (DSD LFE), pin 16 (DSD C).

D SACDB ASSY

SIDE B

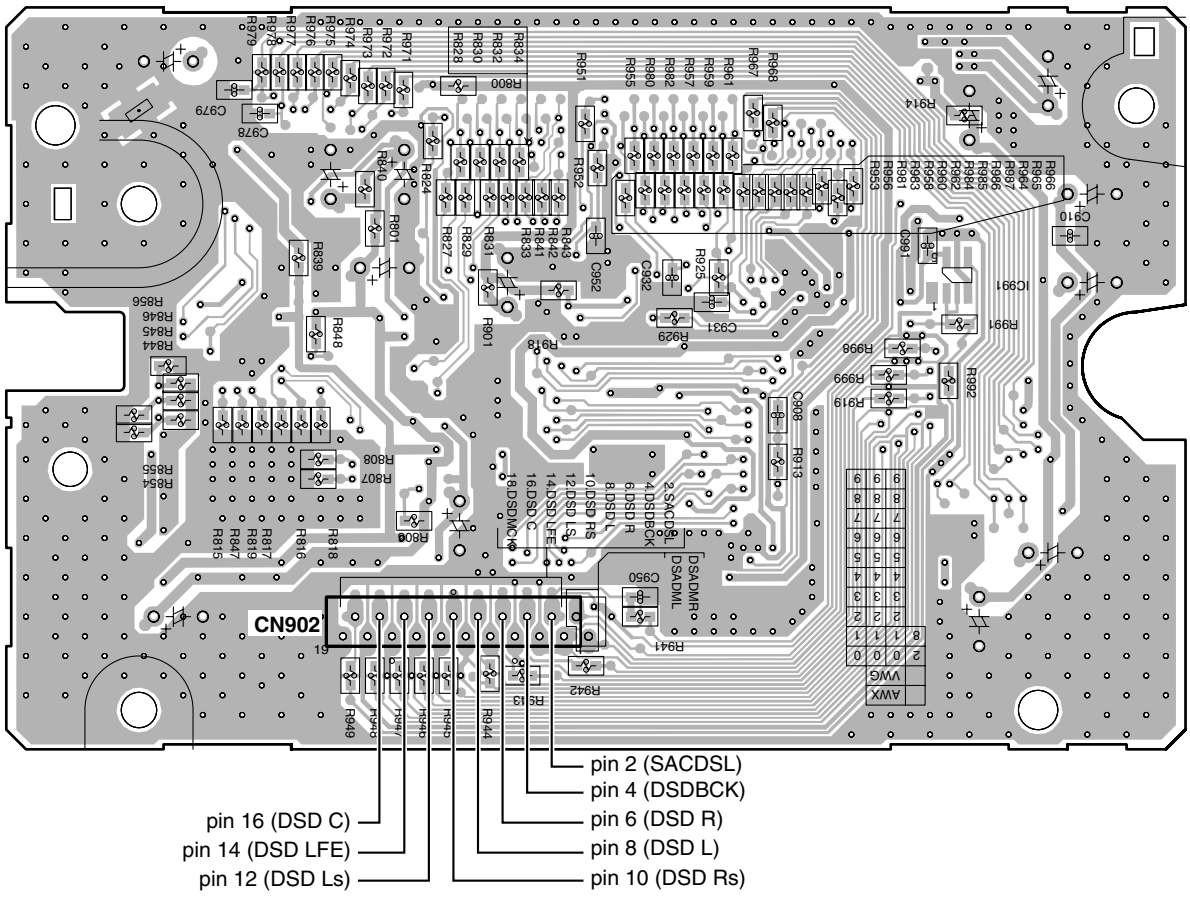

6 Loading Mecha Assy

① Remove four Screws.
② Turn the Short SW to short side.
③ Remove three Flexible Cables and a Connector.

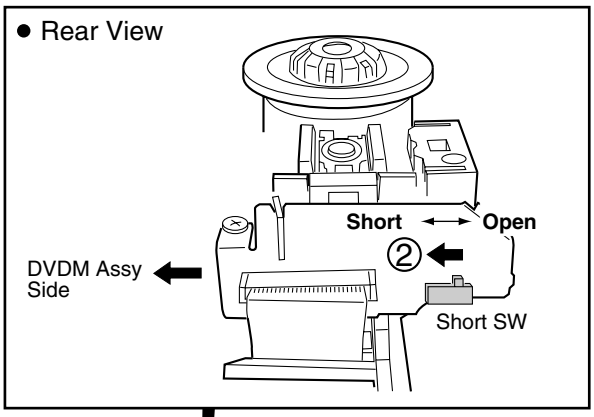

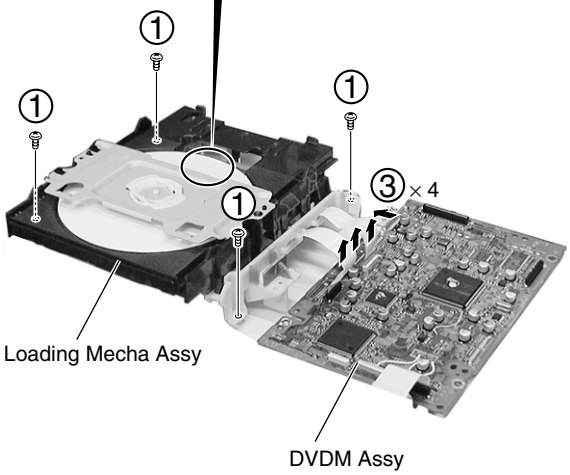

7 Tray

① Remove the Bridge (Screw ×2).
② Pull out the Tray and remove it while unhooking a hook.

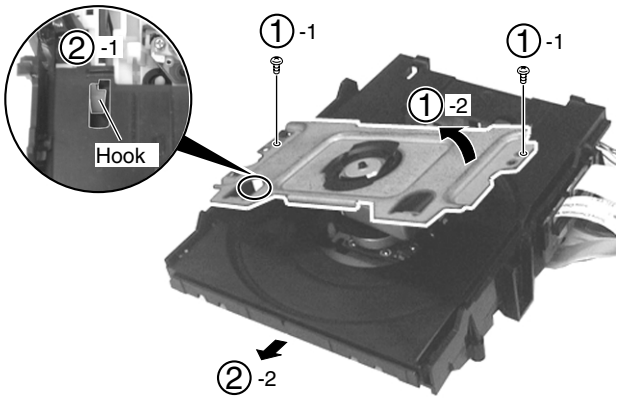

☞Caution in the Tray Insertion

In the Tray insertion, insert it after matching a triangle mark of the Loading Base and a position of pin of the Drive Cam.

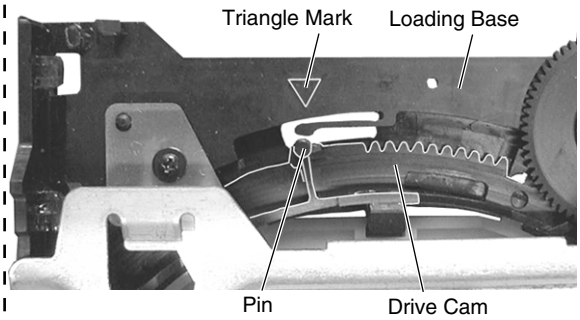

8 Traverse Mechanism Assy-S

① Remove the FFC Holder with the state which Flexible Cable was atatched. (Screw × 1)

Cautions :
Screw is locked with Silicone Adhesive.
Please lock it with Silicone Adhesive when installs it.

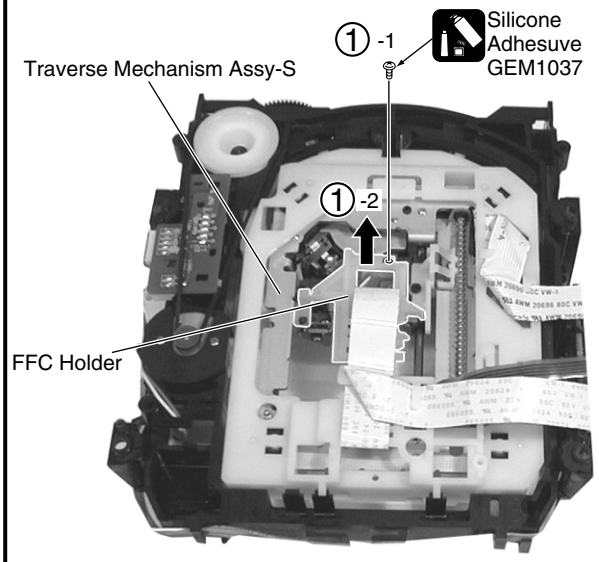

● Bottom View

② Remove the Pickup Flexible Cable

Pickup Assy-S

③ Unhook (× 4)

④ Remove the Traverse Mechanism Assy-S

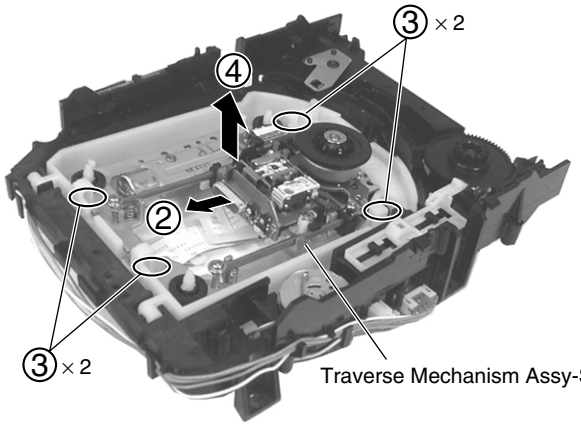

● When Removing The Pickup Assy-S

③ Remove two Skew Screws and two Skew Springs

④ Remove the Pickup Assy-s

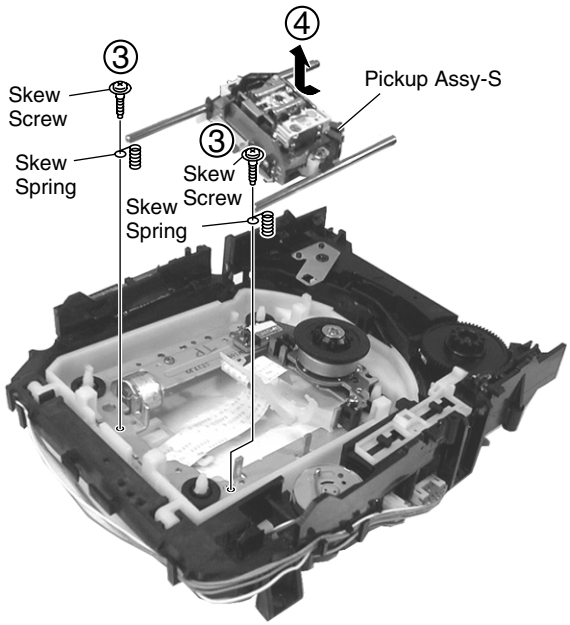

⑤ Remove two Screws

Cautions :
Screw is locked with Silicone Adhesive.
Please lock it with Silicone Adhesive when installs it.

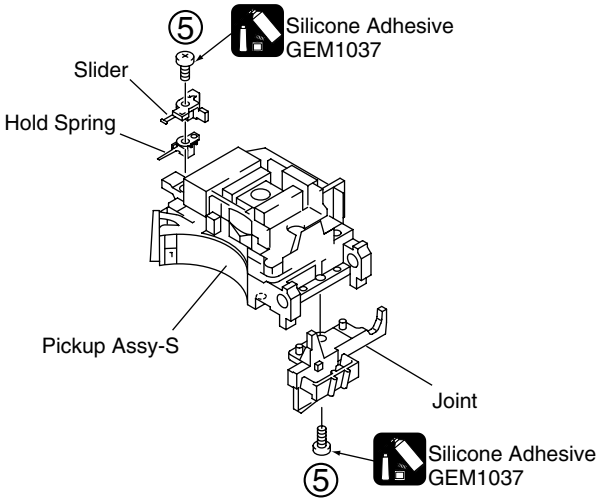

☞STYLING THE PICKUP FLEXIBLE CABLE

① FOLD a edge of lining part of the Pickup Flexible Cable.

② Insert the Pickup Flexible Cable in connector, and lock it surely.

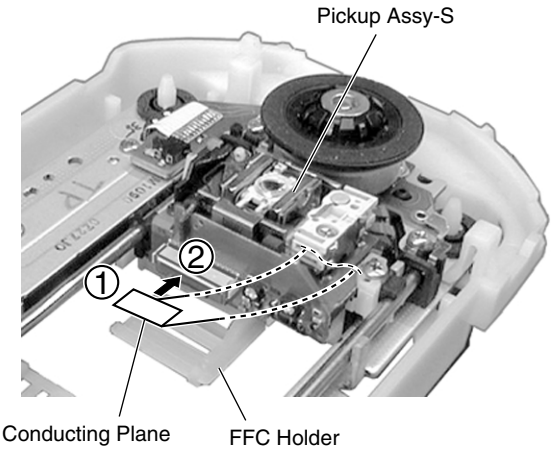

Caution :
Move the Pickup to the innermost of the disc

③ Perform the styling as shown in figure below.

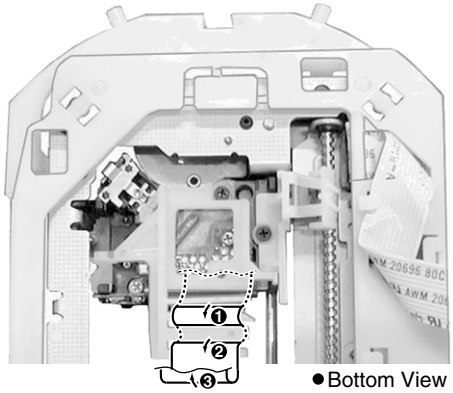

● Bottom View

Fold at the position of reference line. ❻ Reference line

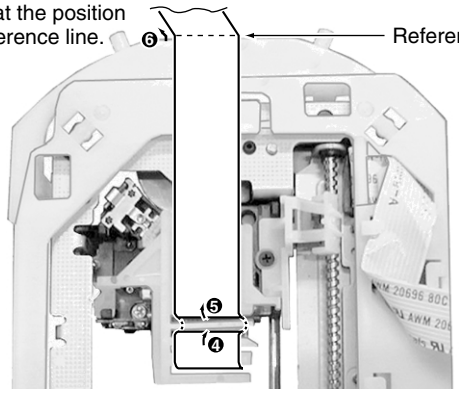

● Bottom View

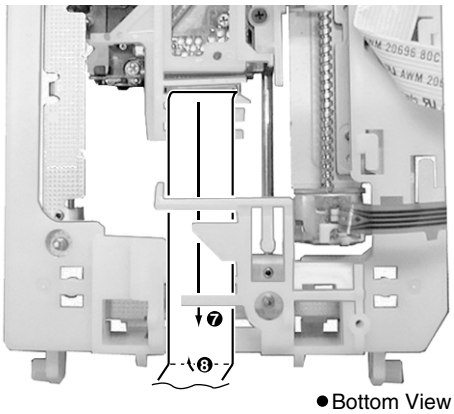

● Bottom View

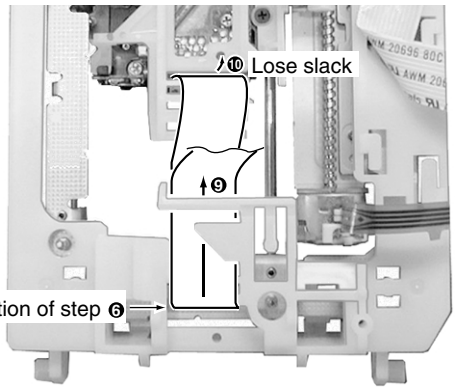

● Bottom View

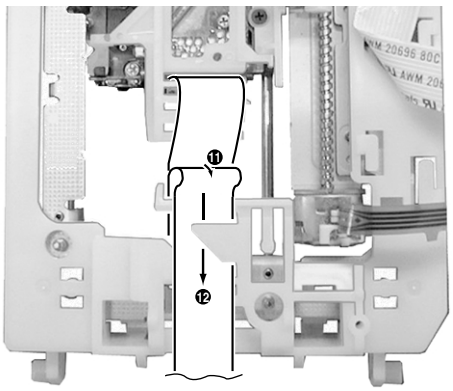

● Bottom View

7.2 IC

• The information shown in the list is basic information and may not correspond exactly to that shown in the schematic diagrams.

• List of IC

LA9704W, LC78652W, BA6664FM, SM8707HV, PD6345A, M65776AFP, AD7172KST, PCM1738EG-3, DSD1702EG, LA73054, CXD2753R, PE5314B, PE5286A

■ LA9704W (DVDM ASSY : IC101)

• RF IC

● Block Diagram

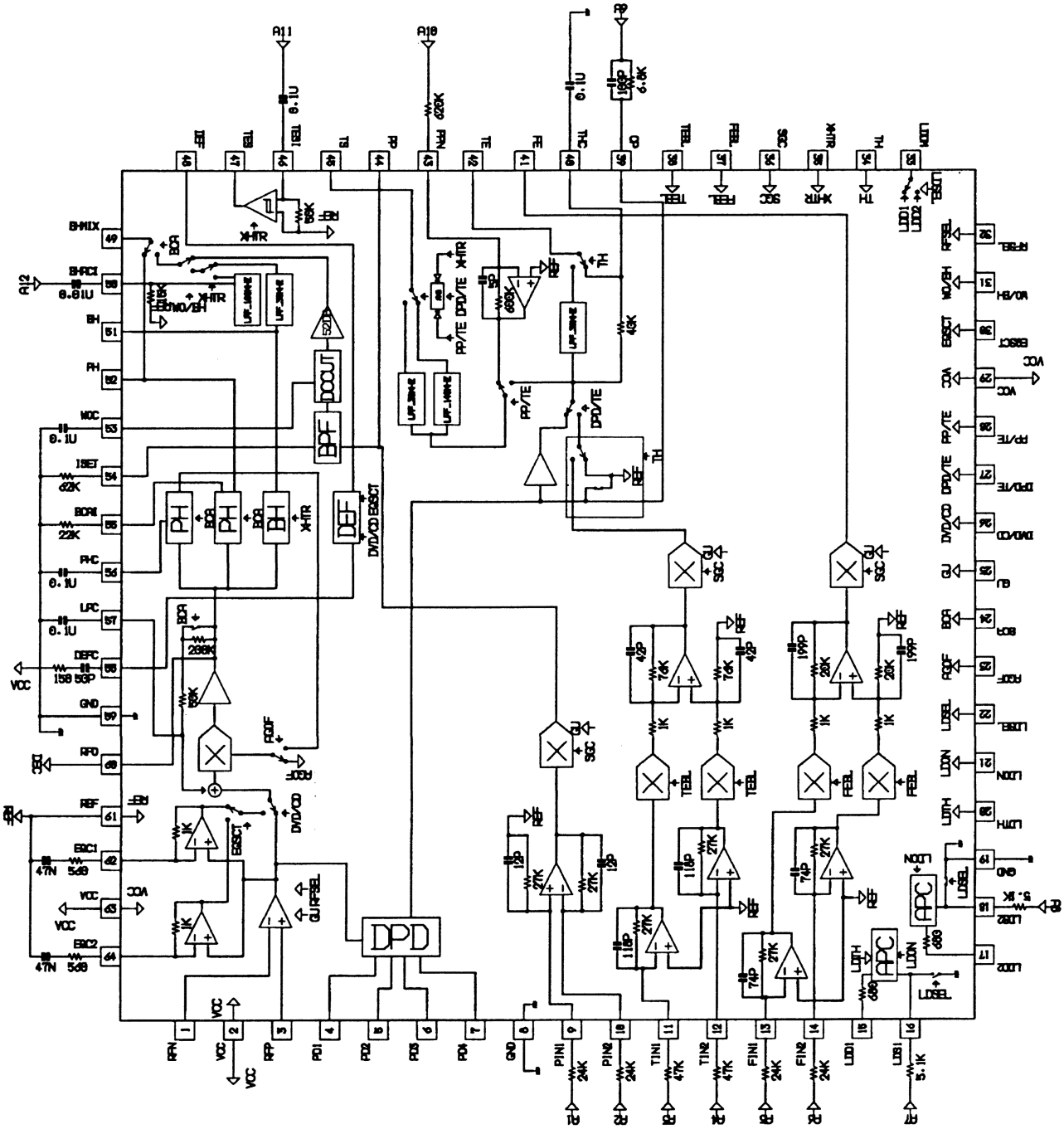

● Pin Function

No.	Pin name	Pin Functions
1	RFN	RF- input
2	VCC	Power supply terminal (for DPD)
3	RFP	RF+ nput
4	PD1	Pickup signal input
5	PD2	
6	PD3	
7	PD4	
8	GND	Ground (for DPD)
9	PIN1	Pickup signal input
10	PIN2	
11	TIN1	
12	TIN2	
13	FIN1	
14	FIN2	
15	LDD1	APC1 output
16	LDS1	APC1 monitor input
17	LDD2	APC2 output
18	LDS2	APC2 monitor input
19	GND	Ground (Servo system)
20	LDTH	APC1 threshold change (H: VCC-1.5V, L: 180mV)
21	LDON	Laser ON terminal (H: ON)
22	LDSEL	APC change terminal (H: APC1)
23	AGOF	RFAGC off terminal
24	BCA	PH electric discharge coefficient change (H: BCA mode)
25	GU	RF, Servo signal gain up terminal (H: Gain up)
26	DVD/CD	RF- equalizer band change terminal (H: DVD)
27	DPD/TE	TE output change terminal (H: DPD)
28	PP/TE	TS output change terminal (H: PP)
29	VCC	Power supply terminal (Servo system)
30	EQSCT	EQ change for CD (H: 62 pin choice)
31	WO/BH	BHMIX output change terminal (H: WOBLE)
32	RFSEL	RF amplifier gain change (H: 6dB up)
33	LDDM	LDD monitor terminal
34	TH	Tracking hold (H: hold)
35	XHTR	Tracking, Bottom band change (L: High bandwidth)
36	SGC	Servo gain control terminal (FE, PP, TE)
37	FEBL	FE balance adjustment terminal
38	TEBL	TE balance adjustment terminal
39	CP	Resistance for charge pump gain setting, a condenser connection terminal
40	THC	Volume connection terminal for tracking hold
41	FE	Focus error output
42	TE	Tracking error output
43	PPN	Ohms connection terminal for push-pull gain setting
44	PP	Push-pull output terminal

No.	Pin name	Pin Functions
45	TS	Tracking cross signal output
46	TESI	TES comparator input terminal
47	TES	TES output
48	DEF	Deffect search
49	BHMIX	PH, BH, woble change output
50	BHACI	BH– AC input
51	BH	RF bottom detection output
52	PH	RF peak detection output
53	WOC	Volume connection terminal for DC cut
54	ISET	Ohms connection terminal for BPF center frequency setting
55	BCAI	Ohms connection terminal for peak hold detection fixed number setting (In BCA)
56	PHC	PH detection condenser connection terminal for RF-AGC
57	LPC	Condenser connection terminal for RF DC servo
58	DEFC	Volume connection terminal for deffect search
59	GND	Ground (RF system)
60	RFO	RF output terminal
61	REF	Reference output terminal
62	EQC1	Equalizer setting terminal for CD
63	VCC	Power supply terminal (RF system)
64	EQC2	Equalizer setting terminal for CD

■ LC78652W (DVDM ASSY : IC201)

• **Servo DSP IC**

● **Block Diagram**

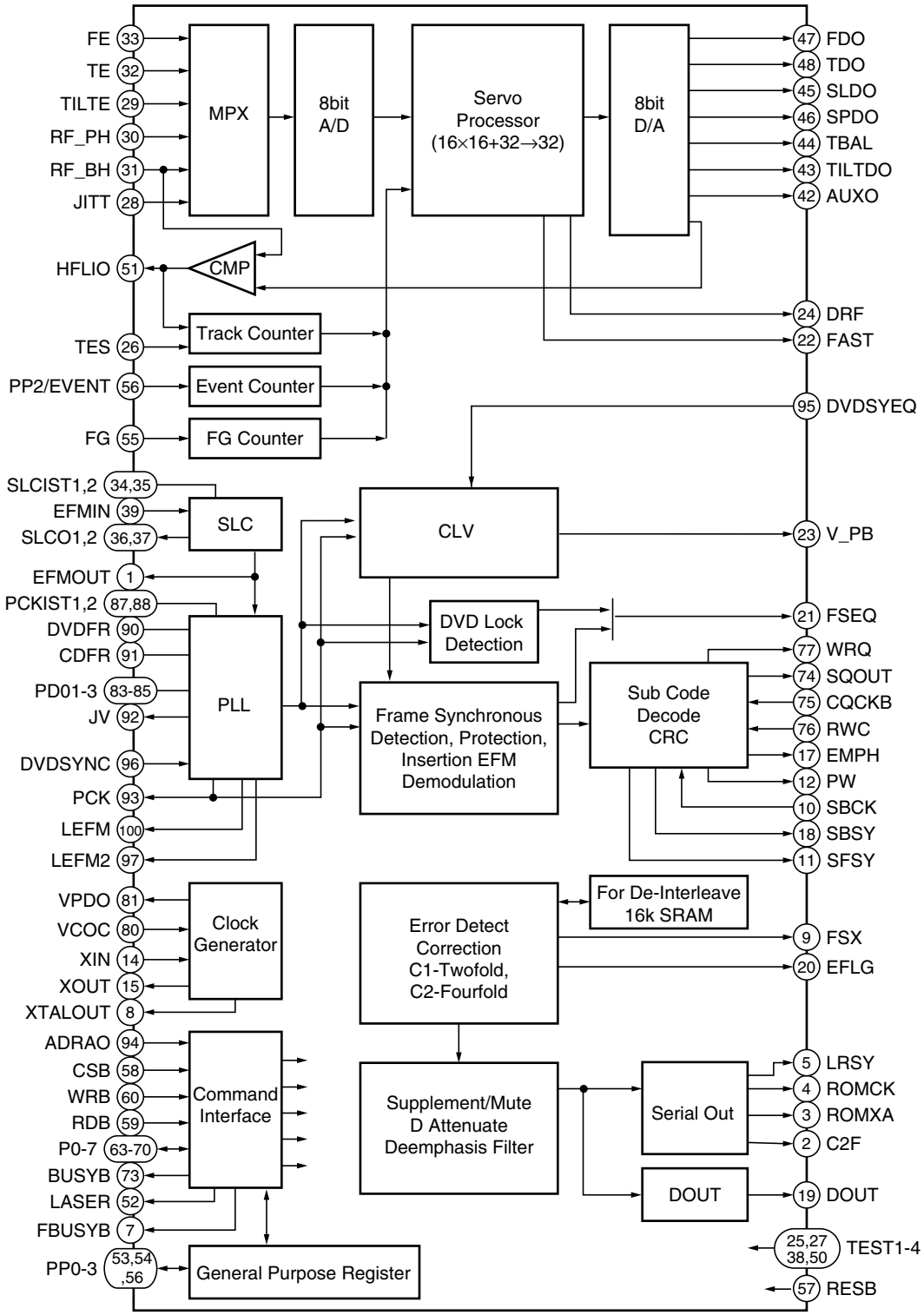

● Pin Function

No.	Pin Name	I/O	Pin Function
1	EFMOUT	O	Output the state that was binary-stated value EFM
2	C2F	O	C2 flag output
3	ROMXA	O	CD-ROM data output
4	ROMCK	O	Shift clock output for CD-ROM data output
5	LRSY	O	L/R clock output for CD-ROM data output
6	PP3	I/O	General-purpose port input/output / DVD sync. signal input N ch-OD output
7	FBUSYB	O	Busy signal output of DSP process operation N ch-OD output
8	XTALOUT	O	External system clock output
9	FSX	O	CD 1 frame sync. signal output
10	SBCK	I	Subcode reading out clock input
11	SFSY	O	Frame sync. signal output of subcode
12	PW	O	Subcode P, Q, R, S, T, U, V and W output
13	VSS	–	GND pin
14	XIN	I	Connect a crystal resonator (16.9344MHz)
15	XOUT	O	Connect a crystal resonator
16	DVDD1	–	3.3V power supply of the oscillation circuit
17	EMPH	O	Monitor pin of the deemphasis
18	SBSY	O	Sync. signal output of the subcode block
19	DOUT	O	Audio EIAJ data output
20	EFLG	O	Error correction state monitor of the error correction C1 and C2
21	FSEQ	O	Detection monitor of the CD/DVD frame sync. signal
22	FAST	O	Playback speed monitor N ch-OD output
23	V_PB	O	Monitor output of the rough servo/CLV control
24	DRF	O	In focus monitor
25	TEST3	I	Test input 3
26	TES	I	Tracking error signal input
27	TEST2	I	Test input 2
28	JITT	I	Jitter quantity detecting signal input of EFM PLL
29	TILTE	I	Tilt error signal input
30	RF_PH	I	RF peak hold signal input
31	RF_BH	I	RF bottom hold signal input
32	TE	I	Tracking error signal input
33	FE	I	Focus error signal input
34	SLCIST1	–	Current setting pin 1 of the constant current charge pump for SLC
35	SLCIST2	–	Current setting pin 2 of the constant current charge pump for SLC
36	SLCO1	O	Control output 1 for SLC
37	SLCO2	O	Control output 2 for SLC
38	TEST1	I	Test input 1
39	EFMIN	I	EFM/EFM + input
40	AVDD	–	5V power supply of A/D and D/A for servo
41	AVSS	–	GND of A/D and D/A for servo
42	AUXO	O	DA auxiliary output
43	TILTDO	O	Tilt control signal output
44	TBAL	O	Tracking balance control signal output
45	SLDO	O	Sled control signal output
46	SPDO	O	Spindle control signal output
47	FDO	O	Focus control signal output
48	TDO	O	Tracking control signal output
49	VREF	–	Reference level of D/A for servo
50	TEST4	I	Test input 4

No.	Pin Name	I/O	Pin Function
51	HFLIO	I/O	Mirror detection signal input/output
52	LASER	O	Output pin for laser ON/OFF control
53	PP0/DVD_CDB	I/O	General-purpose port input/output / Disc discrimination signal output
54	PP1/CRCERRB	I/O	General-purpose port input/output / Subcode CRC result signal output
55	FG	I	FG counter input
56	PP2/EVENT	I/O	General-purpose port input/output / Event counter input
57	RESB	I	Reset input
58	CSB	I	Chip select input
59	RDB	I	Internal state reading signal input
60	WRB	I	Command / data writing signal input
61	DVDD2	–	5V power supply
62	VSS	–	GND
63	P0	I/O	Command / data input/output
64	P1		
65	P2		
66	P3		
67	P4		
68	P5		
69	P6		
70	P7		
71	VSS	–	GND
72	DVDD1	–	3.3V power supply for internal
73	BUSYB	O	Busy signal output of command process
74	SQOUT	O	Serial output of subcode Q
75	CQCKB	I	Shift clock input for subcode Q data output
76	RWC	I	Update permission input of subcode Q
77	WRQ	O	Read out ready monitor of subcode Q
78	AVSS	–	PLL GND for internal system clock
79	VRPFR	–	VCO oscillation range setting of PLL for system clock
80	VCOC	I	Connect a PLL filter for system clock
81	VPDO	O	
82	AVDD	–	PLL 5V power supply for system clock
83	PDO1	I/O	PLL filter connection pin 1 for EFM playback
84	PDO2	I/O	PLL filter connection pin 2 for EFM playback
85	PDO3	I/O	PLL filter connection pin 3 for EFM playback
86	AVSS	–	PLL GND for EFM playback
87	PCKIST1	–	Current setting 1 of PLL constant current charge pump for EFM playback
88	PCKIST2	–	Current setting 2 of PLL constant current charge pump for EFM playback
89	AVDD	–	PLL 5V power supply for EFM playback
90	DVDFR	–	VCO oscillation range setting of PLL for EFM playback 1
91	CDFR	–	VCO oscillation range setting of PLL for EFM playback 2
92	JV	O	Jitter output of PLL clock for EFM playback
93	PCK	O	Bit clock output for EFM playback
94	ADRAO	I	Address input
95	DVDSYEQ	I	DVD synchronize pulse input
96	DVDSYNC	I	DVD synchronous signal input
97	LEFM2	O	Output the state that cut and out a signal which was binary-stated value EFM with PCK 2
98	DVDD1	–	3.3V power supply for I/O
99	VSS	–	GND
100	LEFM	O	Output the state that cut and out a signal which was binary-stated value EFM with PCK 1

■ BA6664FM (DVDM ASSY : IC251)

• Three-phase Motor Driver

● Block Diagram

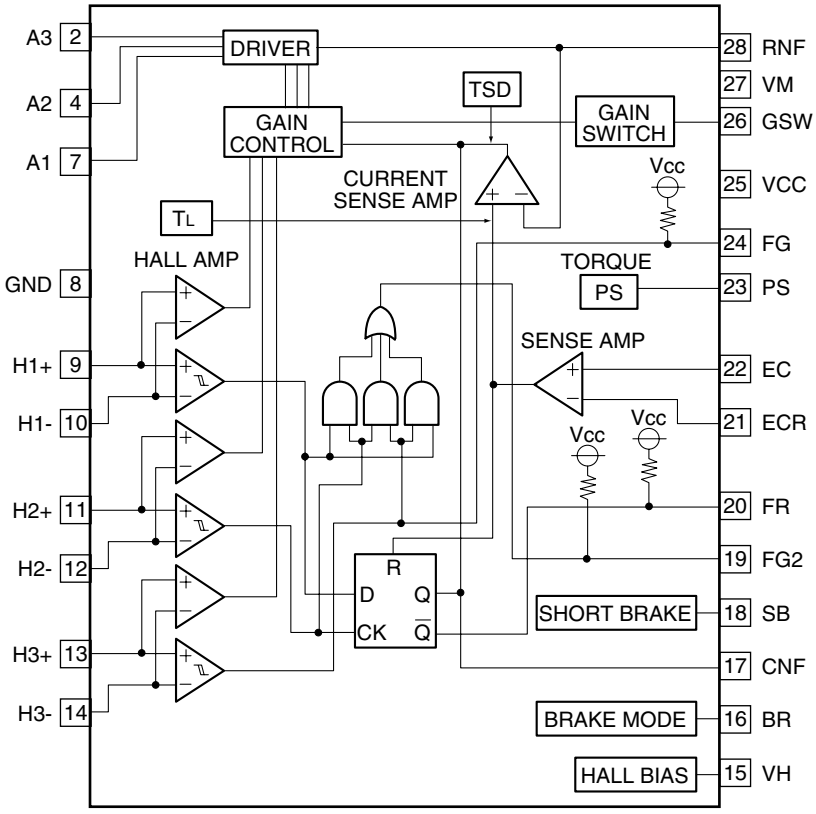

● Pin Function

No.	Pin Name	Pin Function	No.	Pin Name	Pin Function
1	N.C.	N.C.	16	BR	Brake mode switching pin
2	A3	Output pin	17	CNF	Capacitor connection pin for phase compensation
3	N.C.	N.C.	18	SB	Short brake pin
4	A2	Output pin	19	FG2	FG 3-phase mix signal output pin
5	N.C.	N.C.	20	FR	Rotation detecting pin
6	N.C.	N.C.	21	ECR	Control reference pin of output voltage
7	A1	Output pin	22	EC	Output voltage control pin
8	GND	GND pin	23	PS	Power save pin
9	H1+	Hall signal input pins	24	FG	FG signal output pin
10	H1-		25	VCC	Power supply pin
11	H2+		26	GSW	Gain switching pin
12	H2-		27	VM	Motor power pin
13	H3+		28	RNF	Resistor connection pin for output current detection
14	H3-		FIN	FIN	GND
15	VH	Hall bias pin			

■ SM8707HV (DVDM ASSY : IC481)

• **Clock Generate IC**

● Pin Arrangement

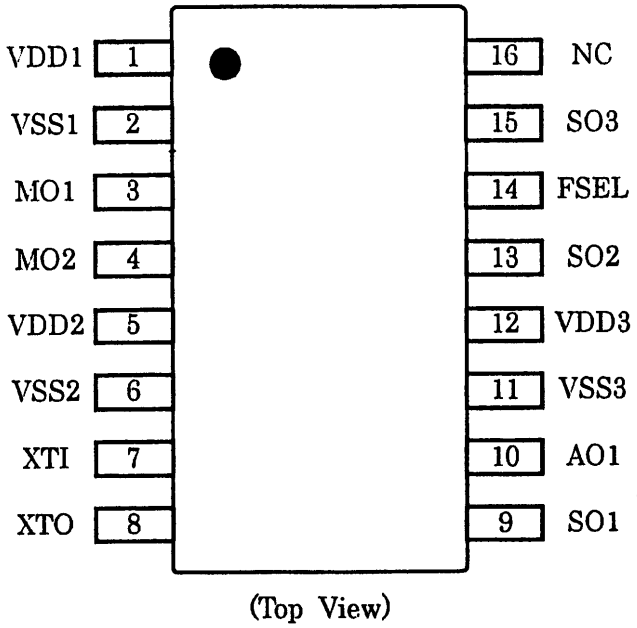

(Top View)

● Pin Function

No.	Pin name	Dir.	Pin Functions
1	VDD1	PWR	Power supply terminal 1 (digital business)
2	VSS1	GND	Earth terminal 1 (digital business)
3	MO1	OUT	Video output terminal 1 (the 27MHz fixed output)
4	MO2	OUT	Video output terminal 2 (the 27MHz fixed output)
5	VDD2	PWR	Power supply terminal 2 (analog business)
6	VSS2	GND	Earth terminal 2 (analog business)
7	XTI	IN	External clock input terminal or crystal resonator connection
8	XTO	OUT	Crystal resonator connection terminal
9	SO1	OUT	Signal conditioning system output terminal 1 (36.8640MHz fixation)
10	AO1	OUT	Sound output terminal 1 (the 512fs output)
11	VSS3	GND	Earth terminal 3 (digital business)
12	VDD3	PWR	Power supply terminal 3 (digital business)
13	SO2	OUT	Signal conditioning system output terminal 2 (16.9344MHz fixation)
14	FSEL	IN	Sampling frequency change terminal FSEL= "L": fs=48kHz FSEL= "H": fs=44.1kHz (There is inside pull-up resister, Schmidt trigger input)
15	SO3	OUT	Signal conditioning system output terminal 3 (33.8688MHz fixation)
16	NC	–	Unused terminal

■ PD6345A (DVDM ASSY : IC601)

• FR CPU

● Pin Function

No.	Mark	Pin Name	I/O	Pin Function
1	P20/D16	D0	I/O	Data bus input/output
2	P21/D17	D1		
3	P22/D18	D2		
4	P23/D19	D3		
5	P24/D20	D4		
6	P25/D21	D5		
7	P26/D22	D6		
8	P27/D23	D7		
9	P30/D24	D8		
10	P31/D25	D9		
11	P32/D26	D10		
12	P33/D27	D11		
13	P34/D28	D12		
14	P35/D29	D13		
15	P36/D30	D14		
16	P37/D31	D15		
17	VSS	GND	–	Ground
18	P40/A00	A0	O	Address bus output
19	P41/A01	A1		
20	P42/A02	A2		
21	P43/A03	A3		
22	P44/A04	A4		
23	P45/A05	A5		
24	P46/A06	A6		
25	P47/A07	A7		
26	VCC3	V+3.3D	–	Power supply
27	VCC2	V+2.5D	–	Power supply
28	P50/A08	A8	O	Address bus output
29	P51/A09	A9		
30	P52/A10	A10		
31	P53/A11	A11		
32	P54/A12	A12		
33	P55/A13	A13		
34	P56/A14	A14		
35	P57/A15	A15		
36	VSS	GND	–	Ground
37	P60/A16	A16	O	Address bus output
38	P61/A17	A17		
39	P62/A18	A18		
40	P63/A19	A19		
41	P64/A20	A20		
42	P65/A21	A21		
43	P66/A22	A22		
44	P67/A23	WBL	O	For Wobble detection corresponding to DVD R/W (main)
45	DAVS	GND	–	Ground
46	DAVC	V+3.3D	–	Power supply
47	DA0	STEP1	I	For stepping motor control
48	DA1	STEP2	I	
49	DA2	LODRV	I	Loading, door and select motor drive

No.	Mark	Pin Name	I/O	Pin Function
50	AN0	NC	I	NC
51	AN1	NC	I	NC
52	AN2	NC	I	NC
53	AN3	XOEM	I	OEM model protection input
54	AN4	LDREAD	I	Input for LD current value indication
55	AN5	NC	I	NC
56	AN6	NC	I	NC
57	AN7	LODPOS	I	Loading clamp position SW input
58	AVCC	V+3.3D	–	Power supply
59	AVRH	V+3.3D	–	Power supply
60	AVSS/AVRI	GND	–	Ground
61	VSS	GND	–	Ground
62	PP0/ATGX	SLDPOS	I	SW input of slider inside position
63	PP1/FRCK	GSW	O	Gain up at ACBR (at ACBR: H, others: L)
64	PP2/IN0	780ON	I	ON/OFF control signal of 780nm laser diode
65	PP3/IN1	GU	O	RF, servo signal gain up terminal (H: Gain up)
66	PP4/IN2	XMON	O	Mute of DRV (spindle motor ON: H)
67	PP5/IN3	XDRVMUT	O	FTS driver mute output
68	PP6	LT1_3V	O	Communication response to the FL controller
69	PP7	XRDY_3V	I	Communication request from the FL controller
70	VCC3	V+3.3D	–	Power supply
71	VCC2	V+2.5D	–	Power supply
72	PO0/OC0	XCURDET	I	Actuator current detection input Servo OFF for "L" 300ms
73	PO1/OC1	XCBUSY	I	Busy signal of command process Command acceptable : "L"
74	PO2/OC2	XDSPRST	O	Servo DSP reset
75	PO3/OC3	BCA	–	BCA read signal (at BCA read: H) (Not used)
76	PO4/OC4	NC	I	NC
77	PO5/OC5	PPCNT	O	Switch of TZC in WBL traversal (at PP: H)
78	PO6/OC6	XDFINH	O	Defect signal control (DEFECT ON: Hi-Z; OFF: "L")
79	PO7/OC7	DPD/TE	O	H=1 beam, L=3 beams
80	VSS	GND	–	Ground
81	PN0/AIN0	DVD/XCD	O	RF EQ switching signal at DVD/CD "H": DVD, "L": CD
82	PN1/BIN0	AGOFF	O	"H": Turn off AGC of RFIC
83	PN2/AIN1	650X780	O	780nm/650nm switching signal
84	PN3/BIN1	LD ON	O	ON/OFF control signal of laser diode
85	PN4/AIN2	WBLSEL	O	NC
86	PN5/BIN2	RFSEL	O	RF amplifier gain change terminal (H: Gain up)
87	PN6/AIN3	XCD2X	O	For VCD double speed playback
88	PN7/BIN3	OEICG	O	"H": Gain of OEIC up to 6dB
89	PM0/ZIN0	EN33M	O	NC
90	PM1/ZIN1	EN24M	O	NC
91	PM2/ZIN2	V SEL	O	(Composite, S) / (YCbCr) or (RGB) switch
92	PM3/ZIN3	V SEL2	O	(Composite) of scart terminal / (S) switch
93	PL0/SDA1	SDAI	12C Serial	12C control lines
94	PL1/SDA0	NC	–	NC
95	PL2/SCL1	SCLI	12C Serial	12C control lines
96	PL3/SCL0	NC	–	NC
97	PL4	CTS	I	RS-232C clear to send input
98	PL5	DTR	O	RS-232C clear to send output
99	PL6/UC0	NC	O	NC
100	VSS	GND	–	Ground

No.	Mark	Pin Name	I/O	Pin Function
101	PK0/TIN0	XVQERST	O	VQE3 reset signal
102	PK1/TIN1	XCSPRO1	–	Serial communication enable of the progressive converter IC
103	PK2/TIN2	XCSVQE5	–	Serial communication enable of VQE5 IC
104	PK3/TIN3	EN16M	O	N.C.
105	PK4/TOT0	44X48	O	DAC and DASP supply clock fs 44/48 selection
106	PK5/TOT1	1394XRDY	I	N.C.
107	PK6/TOT2	AOSEL1	O	AV-1/audio DSP switch (front L/R data)
108	PK7/TOT3	P/XI	O	Progressive/Inter race change signal
109	VCC3	V+3.3D	–	Power supply
110	VCC2	V+2.5D	–	Power supply
111	PJ0/INT0	XINT0	I	
112	PJ1/INT1	XINT1	I	
113	PJ2/INT2	XIRQ10	I	MY chip interrupt #0
114	PJ3/INT3	XIRQ11	I	MY chip interrupt #1
115	PJ4/INT4	XABUSY	I	Busy signal of DSP process operation "L"
116	PJ5/INT5	THLD	I	Playback speed monitoring signal
117	PJ6/INT6	SBSY	I	Sync. signal of subcode block (period SO+SI "H")
118	PJ7/INT7	N.C.	I	N.C.
119	PI0/SI0	SSI	I	Serial bus data input
120	PI1/SO0	SSO_3V	O	Serial bus data output
121	PI2/SCK0	SSCK_3V	I	Serial bus clock input
122	PI3/SI1	RXD_3V	I	RS-232C RXD
123	PI4/SO1	TXD_3V	O	RS-232C TXD
124	PI5/SCK1	NC	O	NC
125	PH0/SI2	1394LT	O	NC
126	PH1/SO2	DSPICM	I	Audio system DSP serial communication Readv signal
127	PH2/SCK2	NC	I	NC
128	MD0	GND	–	Ground
129	MD1	GND	–	
130	MD2	GND	–	
131	VSS	GND	–	Ground
132	VCC2	V+2.5D	–	Power supply
133	VSS	GND	–	Ground
134	X1	EXTAL	O	
135	X0	XTAL	I	
136	VCC3	V+3.3D	–	Power supply
137	PC0/DREQ2	RESET1	O	Audio system DSP reset
138	PC1/DACK2	XCSADSP0	O	Chip select port for audio system DSP
139	PC2/DEOP2	XCSDF2	O	DAC chip select (for surround system L/R)
140	PB0/DREQ0	XDREQ0	I	DMA response output to BY Chip
141	PB1/DACK0	DACK0	O	DMA request input from BY Chip
142	PB2/DEOP0	ENCD	O	N.C.
143	PB3/DREQ1	XDREQ1	I	DMA response output to AV-1 Chip
144	PB4/DACK1	XDACK1	O	DMA request input from AV-1 Chip
145	PB5/DEOP1	EN_FLOW	O	N.C.
146	PB6/IOWRX	XCOMP	O	RGB/color difference change of video driver
147	PB7/IORDX	XCSDF3	O	N.C.
148	VSS	GND	–	Ground
149	PA0/CSOX	XCS20	O	Chip select output to Flash ROM
150	PA1/CS1X	XCS6	O	AV-1 Chip select

No.	Mark	Pin Name	I/O	Pin Function
151	PA2/CS2X	XCS3	O	Chip select of PD4995A (MY Chip)
152	PA3/CS3X	XCS4	O	Chip select of servo DSP
153	PA4/CS4X	XCS23	O	Chip select output to SRAM (1M)
154	PA5/CS5X	N.C.	O	N.C.
155	PA6/CS6X	N.C.	O	N.C.
156	PA7/CS7X	N.C.	O	N.C.
157	VCC3	V+3.3D	–	Power supply
158	VCC2	V+2.5D	–	Power supply
159	NMIX	–	–	V+3.3D fixed
160	HSTX	–	–	V+2.5D fixed
161	INITX	XINIT	I	
162	P80/RDY	RDY	I	
163	P81/BGRNTX	XAMUTE	I	Final stage mute of 2 ch audio output
164	P82/BRQ	XMMUTE	O	Audio multi channel mute
165	P83/RDX	XRD	O	
166	P84/WR0X	XWR0	O	
167	P85/WR1X	XWR1	O	
168	VSS	GND	–	Ground
169	P90/SYSCLK	SYSCLK	O	N.C.
170	P91	DFRST	–	DAC reset (for front L/R)
171	P92/MCLK	DFRST1	–	DAC reset (for center, surround and LFE)
172	P93	XCSDF0	O	DAC chip select (←XLAT3)
173	P94/LBAX	XCSDF1	O	DAC chip select for center, surround and LFE
174	P95/BAAX	XAQRST	O	AQE reset
175	P96	XCSAQE	O	AQE chip select
176	P97/WEX	TM ENT	I	Test mode entry

■ M65776AFP (DVDM ASSY : IC751)

• **MPEG2 Decorder IC**

● **Block Diagram**

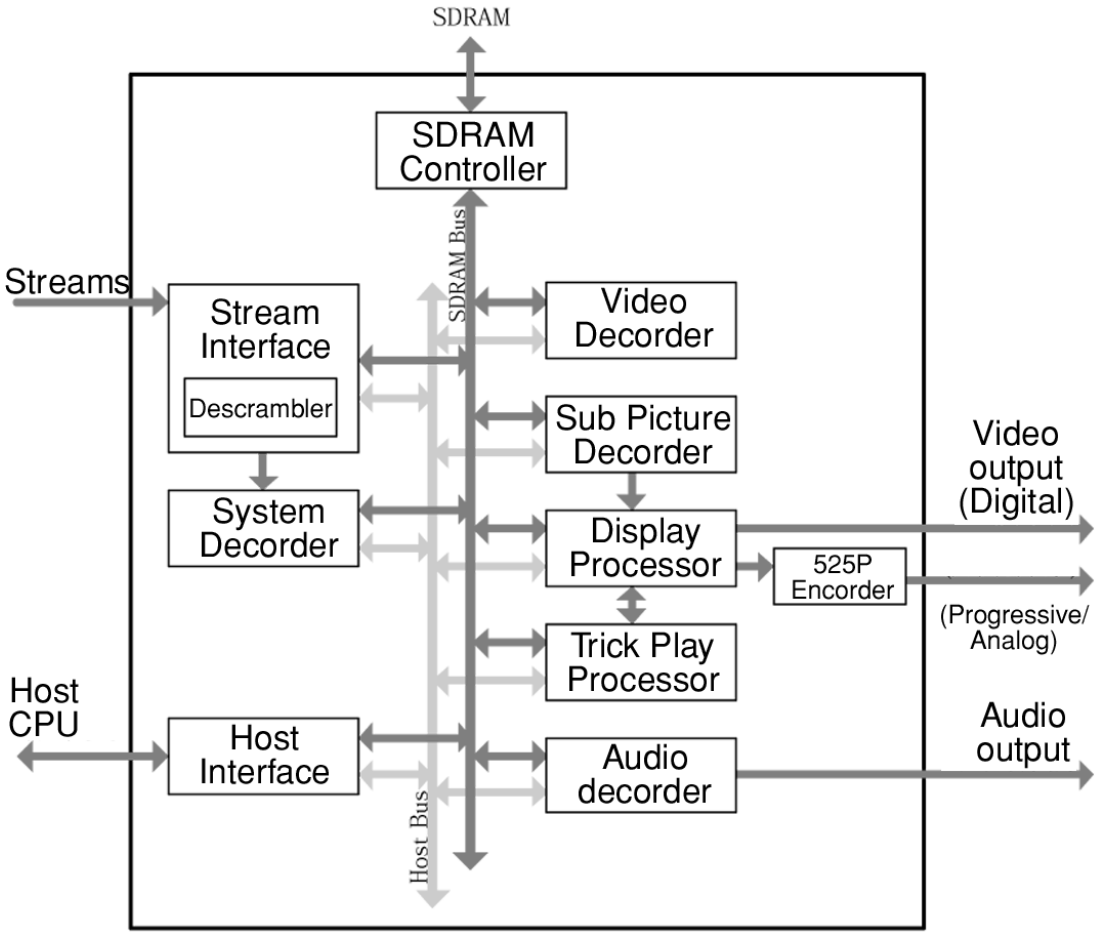

● Pin Function

No.	Pin name	Dir.	Pin Functions
201-208	BD [7:0]	IN	Bit stream data entry pin
2	BCLK	IN	Strobe signal of BD pin (clock)
3	BDEN	IN	This order effective / invalidity of data done a sample of by BD pin. It is done a sample with a start edge of BCLK.
4	BDREQ	OUT	Data demand signal
5	BSECH	IN	This order it whether data of BD pin are with top byte of a sector.
84-87 90-95 97-102	MD [15:0]	I/O	Data transfer line with SDRAM
53-55 58-63 65, 67, 69	MA [11:0]	OUT	Address line of SDRAM
66, 68	MBA [1:0]	OUT	SDRAM bank choice line
70	DCS	OUT	Chip select of SDRAM
73	DCS2		
74	DCS3		
75	DCS4		
76	DCS5		
77	RAS	OUT	RAS (Row Address Strobe) control line of SDRAM
78	CAS	OUT	CAS (Column Address Strobe) control line of SDRAM
82	DQMU	OUT	DQM control line of SDRAM
83	DQML	OUT	DQM control line of SDRAM
80	DWE	OUT	WE control line of SDRAM
79	MCLK	OUT	Movement clock of SDRAM
183	PXCLK	OUT	27MHz pixel clock
182	PXCLKP	OUT	54MHz pixel clock
157, 158, 184-186 188-192	PD [7:0]	OUT	Digital pixel data. Y/Cb/Cr is done multiple of by 8 bit bus, and it is output.
178	CSYNC	IN	Composite SYNC signal input terminal
179	OSDKEY	OUT	OSD key flag output
177	PWD	OUT	The phase comparator output for external synchronization movement
181	HSYNC	OUT	Horizontal synchronizing signal output pin
180	VSYNC	OUT	Vertical synchronizing signal output pin
164	AO0	OUT	Serial PCM data for DAC It output Lf/Rf data.
166	AO1	OUT	Serial PCM data for DAC It output C/Sw data.
167	AO2	OUT	Serial PCM data for DAC It output Ls/Rs data.
168	AOD	OUT	Serial PCM data for DAC It is for the down mixture output.
169	AAD	OUT	Anciallary data output
176	DOCLK	OUT	PCM bit clock
159	LRCLK	OUT	Clock for channel distinction of pulse code modulation audio system data (L/R)
173	DACCLK	OUT	Exaggerated sample movement clock of DAC
161	CDBCK	IN	The pulse code modulation bit clock which is input by CDDSP
160	CDLRCK	IN	The L/R clock which is input by CDDSP

No.	Pin name	Dir.	Pin Functions
163	CDDIN	IN	PCM audio system data which are input by CDDSP
162	CDDATA	IN	Digital audio interface input
170	DOUT0	OUT	Digital audio interface output
171	DOUT1	OUT	Digital audio interface output
6-11 14-19 21-24	HD [15:0]	I/O	Data I/O pin
25, 26 29-34 36-39	HA [11:0]	IN	Address input pin
45	BHE	IN	Byte High Enable signal input pin
41	RE	IN	Read Enable signal input pin
44	WE	IN	Write Enable signal input pin
40	CS	IN	Chip Select signal input pin
46	RDY	OUT	The acknowledge signal which shows that readout of data or a note was completed
47	INT1	OUT	It is an interrupt request signal for outside CPU from M65776AFP
48	INT2		
49	INT3		
51	DREQ	OUT	DMA request signal for OSD BitMap transfer
52	DACK	IN	DMA acknowledge signal for OSD BitMap transfer
194, 195	HMODE [1:0]	IN	Host interface mode of operation setting pin
117	IREF	IN	Reference electric current input pin
115	AVRI	IN	Reference voltage input pin
120	BIAS1	IN	Bias voltage impression pin of current source
118	BIAS2		
119	PAY	OUT	Analog electric current output pin (for Y)
116	PAB	OUT	Analog electric current output pin (for Pb)
122	PAR	OUT	Analog electric current output pin (for Pr)
114	DAOUTB	OUT	Be connected to an analog ground.
113, 121, 123	AVDD33	–	3.3V analog power supply
124	AGND33	–	Analog ground
106	CLKIN	IN	System clock input terminal It input 27MHz clock.
105	CLKO	OUT	27MHz clock output
172	ACLKI	IN	Audio system clock input terminal
193	RESET	IN	Hardware reset terminal
196, 197, 200	TEST [2:0]	IN	Fix it in "L" potential.
12, 27, 42, 56, 71, 88, 103, 134, 155, 174, 198	VDD18	–	1.8V power supply terminal
13, 28, 43, 57, 72, 89, 104, 135, 156, 175, 199	VDD33	–	3.3V power supply terminal

No.	Pin name	Dir.	Pin Functions
1, 20, 35, 50, 64, 81, 96, 112, 125, 145, 165, 187	GND	–	Ground terminal
107	AVDD18	–	1.8V power supply terminal for inside PLL
108	AGND18	–	Ground terminal for inside PLL
109-111 126-133 136-144 146-154	NC0	NC	

■ AD7172KST (DVDM ASSY : IC801)

• Digital PAL/NTSC Video Encoder with Six DACs (10-bits), Color Control and Enhanced Power Management

● Pin Arrangement

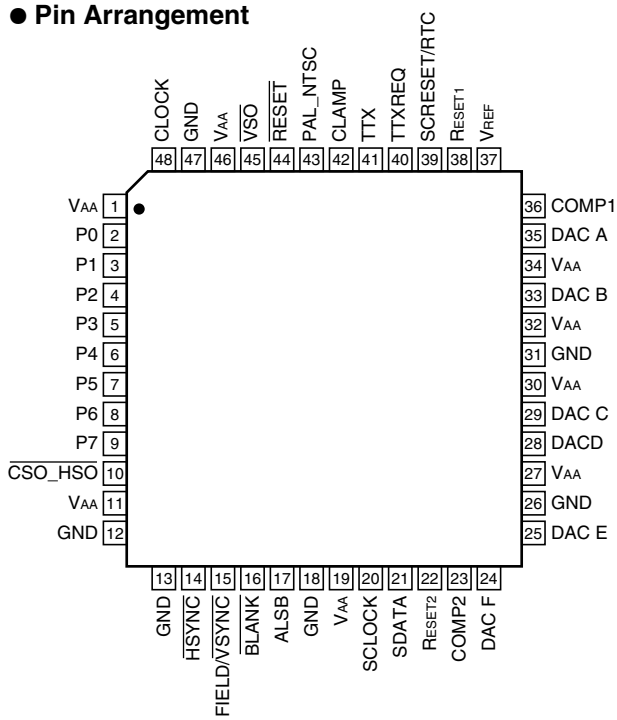

● Block Diagram

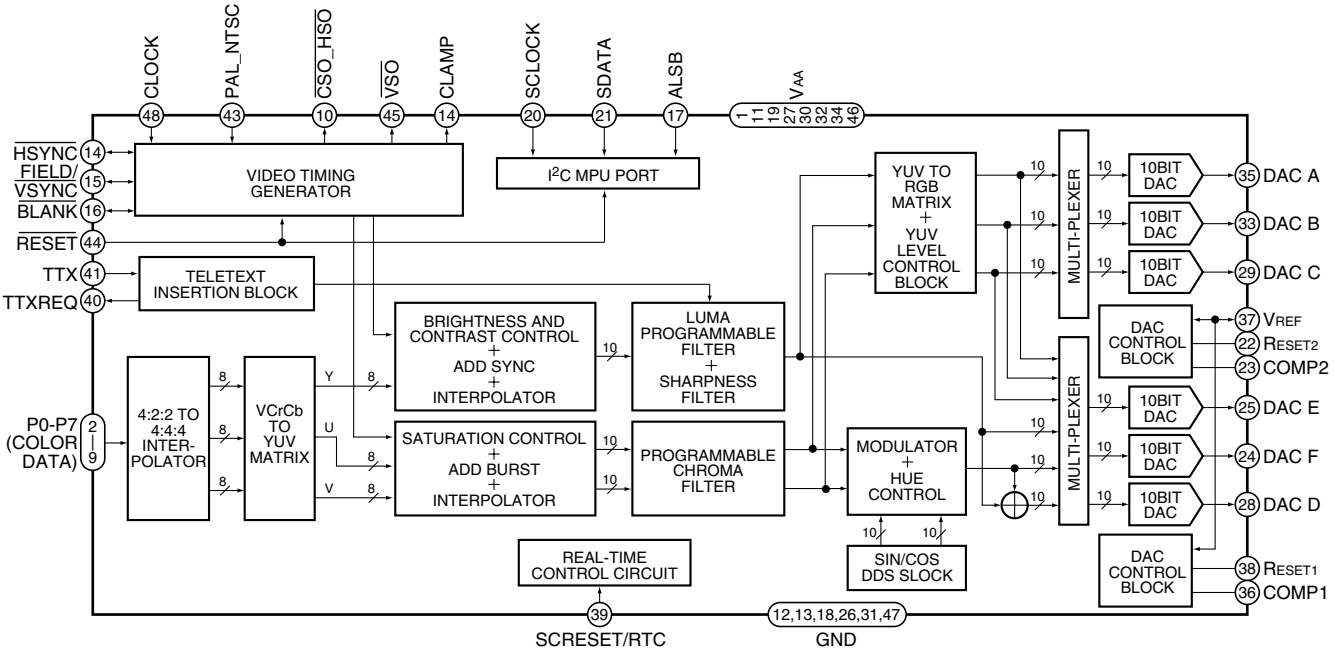

● Pin Function

No.	Name	I/O	Pin Function
1	VAA	P	Power Supply (+3V to +5V)
2	P0	I	8-bit 4 : 2 : 2 Multiplexed YCrCb Pixel Port (P7-P0) P0 represents the LSB
3	P1		
4	P2		
5	P3		

No.	Name	I/O	Pin Function
6	P4	I	8-bit 4 : 2 : 2 Multiplexed YCrCb Pixel Port (P7-P0) P0 represents the LSB
7	P5		
8	P6		
9	P7		
10	CSO_HSO	O	Dual function CSO or HSO TTL Output Sync Signal
11	V_{AA}	P	Power Supply (+3V to +5V)
12	GND	G	Ground Pin
13	GND	G	Ground Pin
14	HSYNC	I/O	HSYNC (Models 1 and 2) Control Signal. This pin may be configured to output (Master Mode) or as an input and accept (Slave Mode) Sync signals.
15	FIELD/VSYNC	I/O	Dual Function FIELD (Mode1) and VSYNC (Mode2) Control Signal. This pin may be configured to output (Master Mode) or as an input (Slave Mode) and accept these control signals.
16	BLANK	I/O	Video Blanking Contrl Signal. The pixel inputs are ignored when this is logic level "0". This signal is optional.
17	ALSB	I	TTL Address Input. This signal sets up the LSB of the MPU address.
18	GND	G	Ground Pin
19	V_{AA}	P	Power Supply (+3V to +5V)
20	SCLOCK	I	MPU Port Serial Interface Clock Input
21	SDATA	I/O	MPU Port Serial Data Input/Output
22	RSET2	I	A 600 ohm resistor connected from this pin to GND is used to control full-scale amplitudes of the Video Signals from DACs D, E and F (the "small" DACs).
23	COMP2	O	Compensation Pin for DACs d, E and F. Connect a 0.1µF Capacitor from COMP to VAA.
24	DAC F	O	RED/S-Video C/V Analog Output. This DAC is capable of providing 8.66 mA output.
25	DAC E	O	BLUE/S-Video Y/U Analog Output. This DAC is capable of providing 8.66 mA output.
26	GND	G	Ground Pin
27	V_{AA}	P	Power Supply (+3V to +5V)
28	DAC D	O	GREEN/Composite/Y Analog Output. This DAC is capable of providing 8.66 mA output.
29	DAC C	O	RED/S-Video C/V Analog Output. This DAC is capable of providing 34.66 mA output.
30	V_{AA}	P	Power Supply (+3V to +5V)
31	GND	G	Ground Pin
32	V_{AA}	P	Power Supply (+3V to +5V)
33	DAC B	O	BLUE/S-Video Y/U Analog Output. This DAC is capable of providing 34.66 mA output.
34	V_{AA}	P	Power Supply (+3V to +5V)
35	DAC A	O	GREEN/Composite/Y Analog Output. This DAC is capable of providing 34.66 mA output.
36	COMP1	O	Compensation Pin for DACs A, B and C. Connect a 0.1µF Capacitor from COMP to VAA. For Optimum Dynamic Performance in Low Power Mode, the value of the COMP1 capacitor can be lowered to as low as 2.2mF.
37	V_{REF}	I/O	Voltage Reference Input for DACs or Voltage Reference Output (1.235V)
38	RSET1	I	A 150 ohm resistor connected from this pin to GND is used to control full-scale amplitudes of the Video Signals from DACs A, B and C (the "large" DACs).
39	SCRESET/RTC	I	This pin can be configured as an input by setting MR42 and MR41 of Mode Resistor 4. It can be configured as a subcarrier reset pin, in which case a high to low transition on this pin will reset the subcarrier phase to Field 0. Alternatively it may be configured as a Real-Time Control (RTCF) Input.
40	TTXREQ	O	Teletext Data Request input signal used to control teletext data transfer.
41	TTX	O	Teletext Data Input Pin.
42	CLAMP	O	TTL Output Signal to external circuitry to enable clamping of all video signals.
43	PAL_NTSC	I	Input signal to select PAL or NTSC mode of operation, pin set to Logic "1" selects PAL.
44	RESET	I	The input resets the on-chip timing generator and sets the ADV7172KST into default mode. This is NTSC operation, Timing Slave Mode 0, DACs A, B and C powered OFF, DACs D, E and F powered ON, Composite and S-Video out.
45	VSO	O	VSO TTL Output Sync Signal
46	V_{AA}	P	Power Supply (+3V to +5V)
47	GND	G	Ground Pin
48	CLOCK	I	TTL Clock Input. Requires a stable 27 MHz reference clock for standard operation. Alternatively, a 24.52 MHz (NTSC) or 29.5 MHz (PAL) can be used for square pixel operation.

■ PCM1738EG-3 (JACB ASSY : IC301)

• D/A Converter IC

● Pin Arrangement

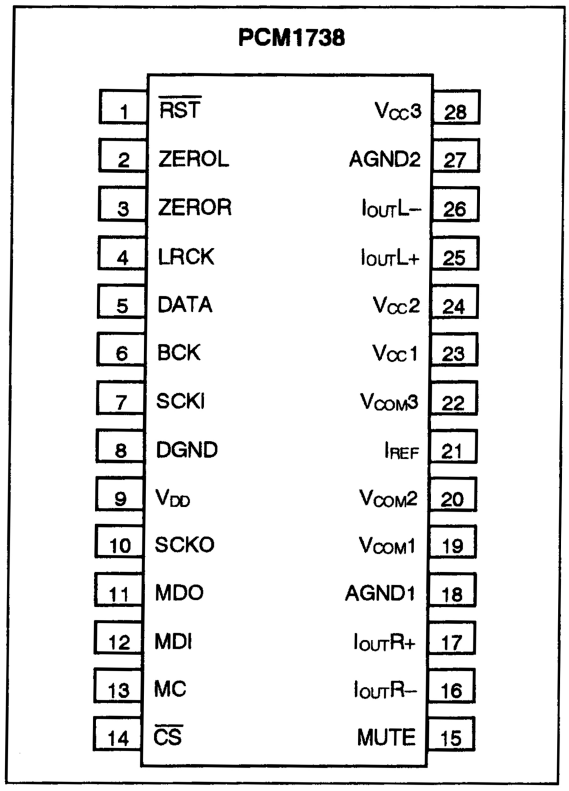

● Pin Function

PIN	NAME	TYPE	DESCRIPTIONS
1	$\overline{RST}$	IN	Reset (1)
2	ZEROL	OUT	Zero Flag for L-channel
3	ZEROR	OUT	Zero Flag for R-channel
4	LRCK	IN	Left and Right Clock (f_S) Input for Normal operation. WDCK clock input in External DF mode. Connected to GND in DSD mode. (1)
5	DATA	IN	Serial Audio Data Input for Normal operation. L-channel audio data input for External DF and DSD modes. (1)
6	BCK	IN	Bit Clock. Input. Connected GND for DSD mode. (1)
7	SCKI	IN	System Clock Input. BCK (64 f_S) clock input for DSD mode (1)
8	DGND	-	Digital Ground
9	V_{DD}	-	Digital Supply, +3.3 V
10	SCKO	OUT	System Clock Output
11	MDO	OUT	Serial data output for function control register (2)
12	MDI	IN	Serial data input for function control register (1)
13	MC	IN	Shift Clock for function control register (1)
14	$\overline{CS}$	IN	Mode control chip select and latch signal. (1)
15	MUTE	IN	Analog output mute control for normal operation R-channel audio data input for external DF mode and DSD mode. (1)
16	$I_{OUT}R-$	OUT	R-channel Analog Current Output –
17	$I_{OUT}R+$	OUT	R-channel Analog Current Output +
18	AGND1	-	Analog Ground.
19	$V_{COM}1$	-	Internal bias de-coupling pin
20	$V_{COM}2$	-	Common voltage for I/V
21	I_{REF}	-	Output current reference bias pin. Connect 16KΩ resistor to GND
22	$V_{COM}3$	-	Internal bias de-coupling pin
23	$V_{CC}1$	-	Analog Supply, +5.0 V
24	$V_{CC}2$	-	Analog Supply, +5.0 V
25	$I_{OUT}L+$	OUT	L-channel Analog Current Output +
26	$I_{OUT}L-$	OUT	L-channel Analog Current Output –
27	AGND2	-	Analog Ground
28	Vcc3	-	Analog Power Supply, +5.0V

NOTES:
(1) Schmitt trigger input, 5 V tolerant.
(2) Tristate output.

■ DSD1702EG (JACB ASSY : IC401, IC501)

• D/A Converter IC

● Block Diagram

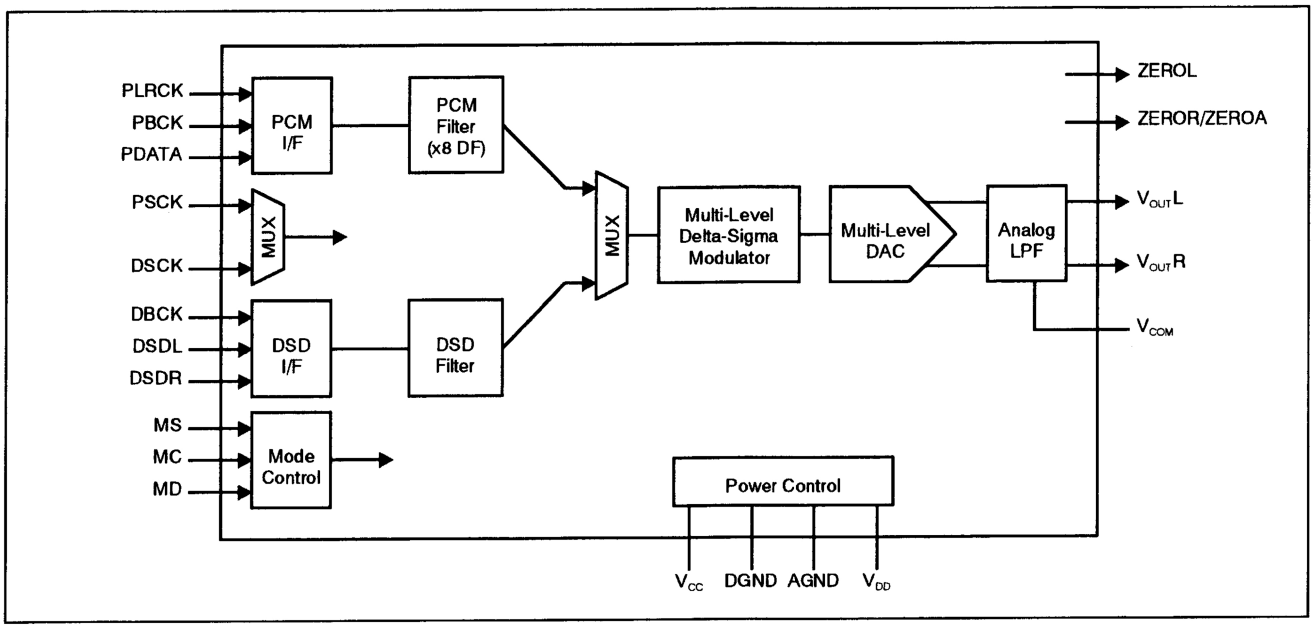

● Pin Arrangement

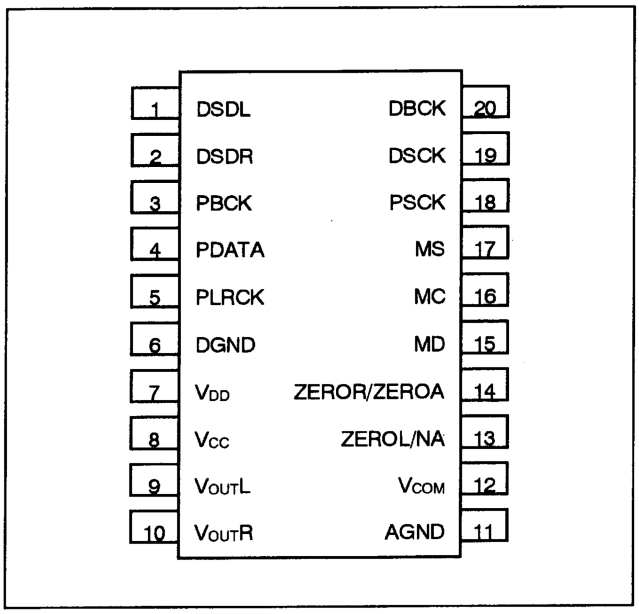

● Pin Function

PIN	NAME	TYPE	DESCRIPTIONS
1	DSDL	IN	Audio data digital input (DSD L-channel) (1)
2	DSDR	IN	Audio data digital input (DSD R-channel) (1)
3	PBCK	IN	Audio data bit clock input. (PCM) (1)
4	PDATA	IN	Audio data digital input. (PCM) (1)
5	PLRCK	IN	Audio data latch enable input. (PCM) (1)
6	DGND	-	Digital ground.
7	V_{DD}	-	Digital power supply, + 3.3 V.
8	V_{CC}	-	Analog power supply, + 5 V.
9	$V_{OUT}L$	OUT	Analog output for L-channel.
10	$V_{OUT}R$	OUT	Analog output for R-channel.
11	AGND	-	Analog ground.
12	V_{COM}	-	Common voltage decoupling.
13	ZEROR/ZEROA	OUT	Zero flag output for R-channel / Zero flag output for L/R-channel.
14	ZEROL/NA	OUT	Zero flag output for L-channel / No assign.
15	MD	IN	Mode control data Input. (2)
16	MC	IN	Mode control clock input. (2)
17	MS	IN	Chip Select for Mode control. (2)
18	PSCK	IN	System clock input. (PCM) (1)
19	DSCK	IN	System clock input. (DSD) (1)
20	DBCK	IN	Audio data bit clock input. (DSD) (1)

Note:

(1) Schmidt trigger input, 5 V tolerant.

(2) Schmidt trigger input with internal pull-down, 5 V tolerant.

■ LA73054 (JACB ASSY : IC701)

• DVD Video Amplifier

● Block Diagram

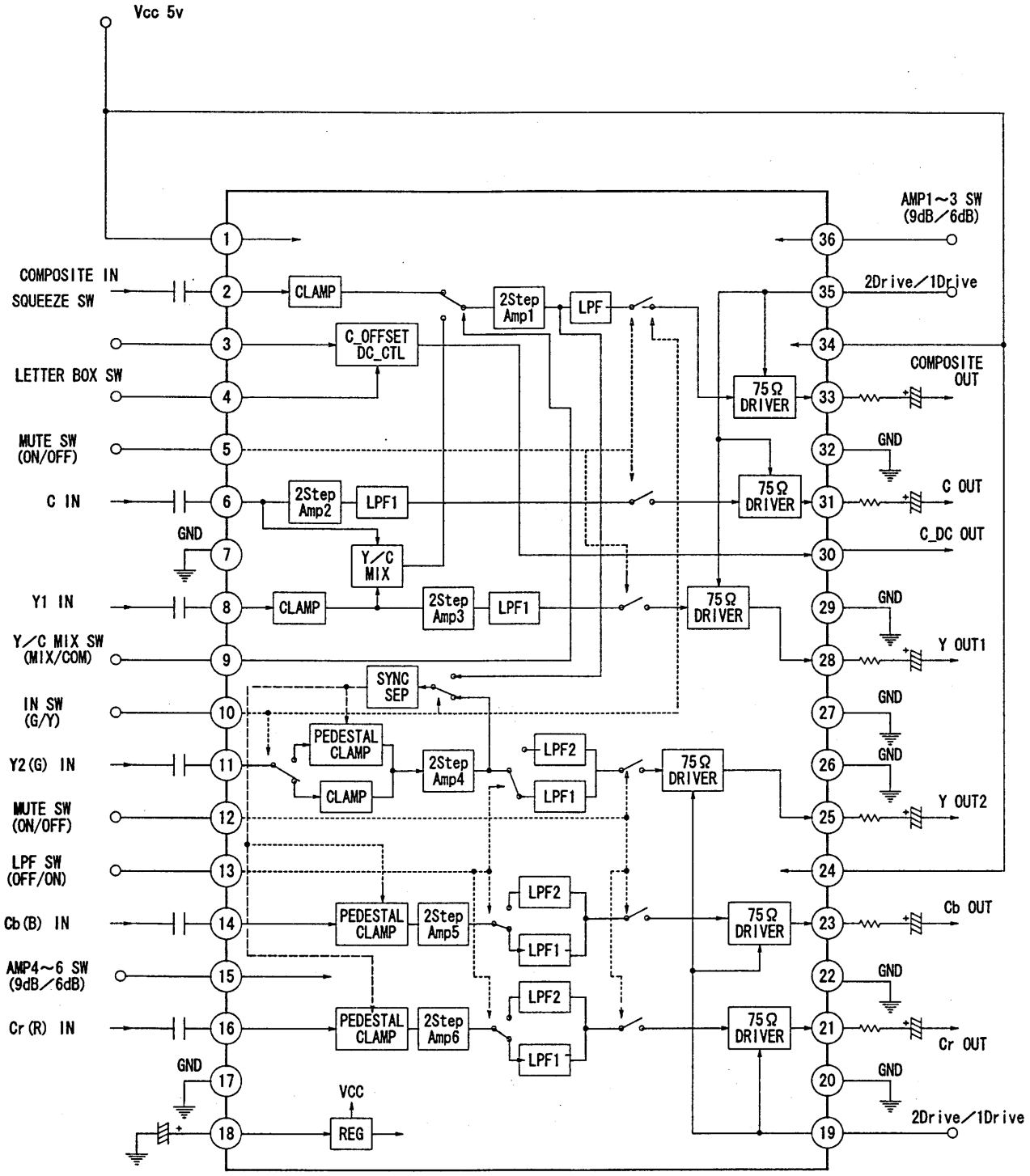

● Pin Function

No.	Pin Functions		0– 0.7V (LOW)	2.6– 5V (HIGH)
36	AMP-GAIN change for composite/S		6 dB	9 dB
15	AMP-GAIN change for component		6 dB	9 dB
35	Drive electric current change for composite/S		2 system drive	1 system drive
19	Drive electric current change for component		2 system drive	1 system drive
5	Mute control for composite/S	In 10 pin LOW	It is not do mute	33, 31, 28 pin mute
		In 10 pin HIGH	It is not do mute	31, 28 pin mute
12	Mute control for component		It is not do mute	25, 23, 21 pin mute
9	The control of Y/C– MIX		In composite	In Y/C– MIX
10	11 pin input form change		In the component input	In the baseband input
13	LPF characteristic change for component		Inter race correspondence	Progressive correspondence

2 pin falls to GND in Y/C-MIX.

11 pin is clamp, and the Y signal input, 14, 16 pin input a CB, CR signal into NTSC (in the component input) with pedestal clamp.

8 pin is clamp, and the Y signal input, 11, 14, 16 pin input a R, G, B signal into PAL (in the baseband input) with pedestal clamp.

It prohibit mute of 5 pin when It do Y/C-MIX in PAL (in the baseband input).

■ CXD2753R (SACDB ASSY : IC901)

• SACD Decorder

● Pin Arrangement

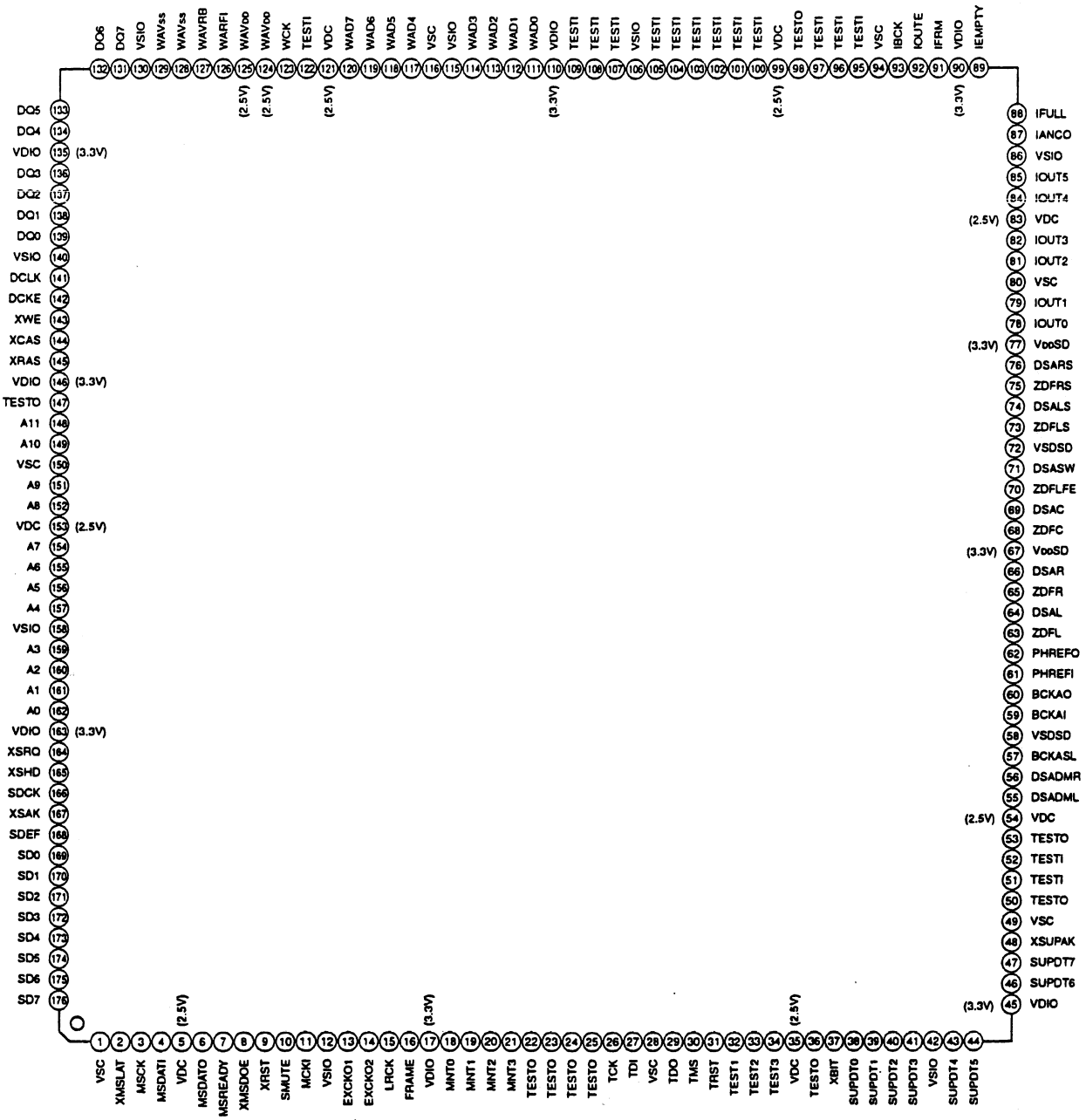

● Pin Function

No.	Pin Name	I/O	Pin Function
1	VSC	-	Ground terminal for core
2	XMSLAT	I	Latched input terminal for microcomputer serial communication
3	MSCK		Shift clock input terminal for microcomputer serial communication
4	MSDAI		Data entry terminal for microcomputer serial communication
5	VDC	-	Power supply terminal for core
6	MSDATO	O	Data output terminal for microcomputer serial communication
7	MSREADY		Output preparation completion flag for microcomputer serial communication
8	XMSDOE		Output enable terminal for microcomputer serial communication
9	XRST	I	Reset terminal resets the whole IC with "L".
10	SMUTE	Ipd	Software mute removes audio out with "L" with "H" a soft mute terminal.
11	MCKI	I	Master clock input terminal
12	VSIO	-	Ground terminal for I/O
13	EXCKO1	O	Outside output clock terminal 1
14	EXCKO2		Outside output clock terminal 2
15	LRCK		1Fs (44.1kHz) clock output terminal
16	FRAME		Frame signal output terminal
17	VDIO	-	Power supply terminal for I/O
18	MNT0	O	Monitor output terminal
19	MNT1		
20	MNT2		
21	MNT3		
22	TESTO		Output terminal for test
23			
24			
25			
26	TCK	I	It is fixation in "L" a clock input terminal for test.
27	TDI	Ipu	Input terminal for test
28	VSC	-	Ground terminal for core
29	TDO	O	Output terminal for test
30	TMS	Ipu	Input terminal for test
31	TRST		Reset terminal for test
32	TEST1	I	It is fixation in "L" a clock input terminal for test.
33	TEST2		
34	TEST3		
35	VDC	-	Power supply terminal for core
36	TESTO	O	Output terminal for test
37	XBIT		DST connection monitor terminal
38	SUPDT0		Supplementary data output terminal (LSB)
39	SUPDT1		Supplementary data output terminal
40	SUPDT2		
41	SUPDT3		
42	VSIO	-	Ground terminal for I/O
43	SUPDT4	O	Supplementary data output terminal
44	SUPDT5		
45	VDIO	-	Power supply terminal for I/O
46	SUPDT6	O	Supplementary data output terminal
47	SUPDT7		Supplementary data output terminal (MSB)
48	XSUPAK		Supplementary data output terminal
49	VSC	-	Ground terminal for core
50	TESTO	O	Output terminal for test

No.	Pin Name	I/O	Pin Function
51	TESTI	I	It is fixation in "L" a test input terminal.
52			
53	TESTO	O	Output terminal for test
54	VDC	-	Power supply terminal for core
55	DSADML	O	DSD data output terminal for Lch Down Mix
56	DSADMR		DSD data output terminal for Rch Down Mix
57	BCKASL	I	Input and output choice terminal of a 1 bit clock for DSD data output.L= input (slave), H = output (master).
58	VSDSD	-	Ground terminal for DSD data output
59	BCKAI	I	Bit clock input terminal for DSD data output
60	BCKAO	O	Bit clock output terminal for DSD data output
61	PHREFI	I	Phase reference signal input terminal for DSD output phase modulation
62	PHREFO	O	Phase reference signal output terminal for DSD output phase modulation
63	ZDFL		Zero Lch data search flag
64	DSAL		DSD data output terminal for Lch loud speaker
65	ZDFR		Zero Rch data search flag
66	DSAR		DSD data output terminal for Rch loud speaker
67	VDDSD	-	Power supply Mizuko for DSD data output
68	ZDFC	O	Zero Cch data search flag
69	DSAC		DSD data output terminal for Cch loud speaker
70	ZDFLFE		Zero LFEch data search flag
71	DSASW		DSD data output terminal for SWch loud speaker
72	VSDSD	-	Ground terminal for DSD data output
73	ZDFLS	O	Zero LSch data search flag
74	DSALS		DSD data output terminal child for LSch loud speaker
75	ZDFRS		Zero RSch data search flag
76	DSARS		DSD data output terminal for RSch loud speaker
77	VDDSD	-	Power supply Mizuko for DSD data output
78	IOUT0	O	Data output terminal 0 for IEEE1394 link tip I/F
79	IOUT1		Data output terminal 1 for IEEE1394 link tip I/F
80	VSC	-	Ground terminal for core
81	IOUT2	O	Data output terminal 2 for IEEE1394 link tip I/F
82	IOUT3		Data output terminal 3 for IEEE1394 link tip I/F
83	VDC	-	Power supply terminal for co
84	IOUT4	O	Data output terminal 4 for IEEE1394 link tip I/F
85	IOUT5		Data output terminal 5 for IEEE1394 link tip I/F
86	VSIO	-	Ground terminal for I/O
87	IANCO	O	Transmission information data output terminal for IEEE1394 link tip I/F
88	IFULL	I	Data transmission hold demand signal input terminal for IEEE1394 link tip I/F
89	IEMPTY		High speed transmission demand signal input terminal for IEEE1394 link tip I/F
90	VDIO	-	Power supply terminal for I/O
91	IFRM	O	Frame reference signal output Mizuko for IEEE1394 link tip I/F
92	IOUTE		Enable signal output terminal for IEEE1394 link tip I/F
93	IBCK		Data transmission clock output terminal for IEEE1394 link tip I/F
94	VSC	-	Ground terminal for core
95	TESTI	I	It is fixation in "H" a test input terminal.
96			It is fixation in "L" a test input terminal.
97		Ipu	It is fixation in "H" a test input terminal.
98	TESTO	O	Output terminal for test
99	VDC	-	Power supply terminal for co
100	TESTI	I	It is fixation in "L" a test input terminal.

No.	Pin Name	I/O	Pin Function
101	TESTI	I	It is fixation in "L" a test input terminal.
102			
103			
104			
105			
106	VSIO	-	Ground terminal for I/O
107	TESTI	I	It is fixation in "L" a test input terminal.
108			
109			
110	VDIO	-	Power supply terminal for I/O
111	WAD0	I	Outside A/D data entry terminal for PSP Physical Disc Mark search (LSB)
112	WAD1		Outside A/D data entry terminal for PSP Physical Disc Mark search
113	WAD2		
114	WAD3		
115	VSIO	-	Ground terminal for I/O
116	VSC	-	Ground terminal for core
117	WAD4	I	Outside A/D data entry terminal for PSP Physical Disc Mark search
118	WAD5		
119	WAD6		
120	WAD7		Outside A/D data entry terminal for PSP Physical Disc Mark search (MSB)
121	VDC	-	Power supply terminal for core
122	TESTI	I	It is fixation in "L" a test input terminal.
123	WCK		Movement clock for PSP Physical Disc Mark search
124	WAVDD	-	A/D power supply terminal for PSP Physical Disc Mark search
125			
126	WARFI	Ai	Analog RF signal input terminal for PSP Physical Disc Mark search
127	WAVRB		A/D bottom reference terminal for PSP Physical Disc Mark search
128	WAVSS	-	A/D ground terminal for PSP Physical Disc Mark search
129			
130	VSIO	-	Ground terminal for I/O
131	DQ7	I/O	SDRAM data input-output terminal (MSB)
132	DQ6		SDRAM data input-output terminal
133	DQ5		
134	DQ4		
135	VDIO	-	Power supply terminal for I/O
136	DQ3	I/O	SDRAM data input-output terminal
137	DQ2		
138	DQ1		
139	DQ0		SDRAM data input-output terminal (LSB)
140	VSIO	-	Ground terminal for I/O
141	DCLK	O	Clock output terminal for SDRAM
142	DCKE		Clock enable output terminal for SDRAM
143	XWE		Wright enable output terminal for SDRAM
144	XCAS		Column address strobe output terminal for SDRAM
145	XRAS		Row address strobe output terminal for SDRAM
146	VDIO	-	Power supply terminal for I/O
147	TESTO	O	Output terminal for test
148	A11		Address output terminal for SDRAM (MSB)
149	A10		Address output terminal for SDRAM
150	VSC	-	Ground terminal for core

No.	Pin Name	I/O	Pin Function
151	A9	O	Address output terminal for SDRAM
152	A8		
153	VDC	-	Power supply terminal for core
154	A7	O	Address output terminal for SDRAM
155	A6		
156	A5		
157	A4		
158	VSIO	-	Ground terminal for I/O
159	A3	O	Address output terminal for SDRAM
160	A2		
161	A1		
162	A0		Address output terminal for SDRAM (LSB)
163	VDIO	-	Power supply terminal for I/O
164	XSRQ	O	Data request output terminal to input into a front end processor
165	XSHD	I	Input terminal of a header flag output by a front end processor
166	SDCK		Input terminal of a data carrier clock output by a front end processor
167	XSAK		Input terminal of data partial response flag output by a front end processor
168	SDEF		Input terminal of error flag output by a front end processor
169	SD0		The stream data input terminal which is output by a front end processor (LSB)
170	SD1		The stream data input terminal which is output by a front end processor
171	SD2		
172	SD3		
173	SD4		
174	SD5		
175	SD6		
176	SD7		The stream data input terminal which is output by a front end processor (MSB)

Ipu : Pull-up input, Ipd : Pull-down input, Ai : Analog input

■ PE5314B (FLKY ASSY : IC101)

• FL Controller

● Pin Function

No.	Signal name	Dir.	Pin Functions
1	V_{DD1}	–	Positive Power Supply (3.3 V)
2	V_{SS1}	–	Ground Potential
3	X1	IN	Crystal Connection for Main System Clock Oscillation
4	X2	–	
5	IC	–	Internally Connected (Directly connect to VSS1)
6	RESET	IN	Reset Input
7	SCK1	IN	Serial Clock Input of Serial Interface
8	SI1	IN	Serial Data Input of Serial Interface
9	SO1	OUT	Serial Data Output of Serial Interface
10	XRDY	OUT	Hand-shake (Ready) Output of Serial Interface
11	POWER ON	OUT	Power Control Output
12	RESET OUT	OUT	System Reset Output
13	RESERVE OUT	OUT	Reserved (NC on this model)
14	LED8	OUT	LED Port 8 (NC on this model)
15	HALT	IN	Halt Port "NC" : Use Halt Mode
16	ACK	IN	Hand-shake (Acknowledge) Input of Serial Interface (Interrupt)
17	SEL IR	IN	Remote Control Input (Timer input of 8-bit remote control timer)
18	A_{VSS}	–	Ground Potential for A/D Converter
19	MS1	IN	Destination (of player) Select (Analog Input for A/D Converter)
20	NC	–	NC
21	KEY1	IN	Key Input 1 (Analog input for A/D converter)
22	KEY0	IN	Key Input 0 (Analog input for A/D converter)
23	VSS0	–	Ground Potential to Ports
24	AVDD	–	Analog Power/Reference Voltage Input to A/D Converter (3.3 V)
25	VDD0	–	Positive Power Supply to Ports (3.3 V)
26	MS0_2	IN	Model (of player) Select (Set with a combinaition of this 3 ports)
27	MS0_1		
28	MS0_0		
29	LED7	OUT	LED Port 7
30	LED(STAND BY)	OUT	Stand By LED Port
31	PWSW	IN	Primary Switch State Input "H" : ON "L" : OFF
32	TES	IN	"H" : No System Reset mode "L" : General mode
33	OEM	IN	"H" : OEM Model "L" : Pioneer Model
34	MIC IN	IN	Detection of Microphone "H" : Microphone connected
35	CHECKER	IN	"H" : Checker Mode "L" : General mode
36	ON POWER	IN	"H" : Primary Power Switch Model "L" : Secondary Power Switch Model
37	FL SET2	IN	FL-Controller Mode Select FL SET1 / 2 = "H" / "H" : Other model FL SET1 / 2 = "H" / "L" : Other model FL SET1 / 2 = "L" / "H" : Other model FL SET1 / 2 = "L" / "L" : DV-555, 656A, 757Ai (This model)
38	FL SET1		
39	TEST2	OUT	Test Port
40	LED6	OUT	LED Port 6

No.	Signal name	Dir.	Pin Function
41	LED5	OUT	LED Port 5
42	LED4		LED Port 4
43	LED3		LED Port 3 (NC on this model)
44	LED2		LED Port 2 (NC on this model)
45	LED1		LED Port 1 (NC on this model)
46	LED0		LED Port 0 (NC on this model)
47	TEST1	OUT	Test Port
48	NC	–	NC
49	1394RST	OUT	1394 Host Controller Reset Output
50	NC	–	NC
51	P16	OUT	FIP Segment 16 Output
52	P15	OUT	FIP Segment 15 Output
53	NC	–	NC
54	P14	OUT	FIP Segment 14 Output
55	P13		FIP Segment 13 Output
56	P12		FIP Segment 12 Output
57	P11		FIP Segment 11 Output
58	P10		FIP Segment 10 Output
59	VDD2	–	Positive Power Supply to FIP Controller/Driver (3.3 V)
60	VLOAD	–	Pull-down Resistor Connection of FIP Controller/Driver (-28V)
61	P9	OUT	FIP Segment 9 Output
62	P8		FIP Segment 8 Output
63	P7		FIP Segment 7 Output
64	P6		FIP Segment 6 Output
65	P5		FIP Segment 5 Output
66	P4		FIP Segment 4 Output
67	P3		FIP Segment 3 Output
68	P2		FIP Segment 2 Output
69	P1		FIP Segment 1 Output
70	G11	OUT	FIP Grid 11 Output
71	G10		FIP Grid 10 Output
72	G9		FIP Grid 9 Output
73	G8		FIP Grid 8 Output
74	G7		FIP Grid 7 Output
75	G6		FIP Grid 6 Output
76	G5		FIP Grid 5 Output
77	G4		FIP Grid 4 Output
78	G3		FIP Grid 3 Output
79	G2		FIP Grid 2 Output
80	G1		FIP Grid 1 Output

■ PE5286A (DVDM ASSY : IC701)

• DVD Data Processor

● Pin Function

No.	Pin name	Dir.	Pin Functions
3, 40, 50, 54, 84, 103, 107, 145, 154, 158, 207	VDD3.3	–	It is a power supply of digital circuit. Be connected to +3.3V.
15, 18, 27, 53, 64, 74, 78, 92, 104, 130, 157, 164, 183, 191, 208	VDD2.5	–	It is a power supply of digital circuit. Be connected to +2.5V.
1, 2, 16, 17, 26, 41, 51, 52, 63, 73, 79, 85, 91, 105, 106, 131, 144, 150, 155, 156, 178, 182, 190	GND	–	It is a ground of digital circuit.
167, 171, 175	NC	–	It is a non-use pin. Fix it in GND or VDD.
165 166	AVDD	–	It is a power supply supply terminal for built-in analog-to-digital converter. Supply +2.5V (analog).
176 177	AGND	–	It is a GND terminal for built-in D/A converter.
6	BUNRI	IN	It is a separation test control terminal of inside RAM. Input LOW in use usually.
90	TMC1	IN	It is a test terminal. Input LOW in use usually.
148	TMC2	IN	
4	DMCK/RF_A	IN	It is the system clock input of DVD/CD-ROM decoder. Input 10-54MHz.
189	CKCD	IN	It is master clock of an audio system I/F block. In audio out of a CD, input 16.9MHz of reference clock.
5	DMACKI/PD4	IN	Fix unused time (unused usually) in GND or VDD.
149	VCOCLK	IN	With system clock of spindle demodulator, it is connected to VCO of outside charge account.
161	XRESET	IN	By the input of a LOW level, It initialize the whole large scale integrated circuit system.
135	SA19	I/O	Connect address bus of central processing unit.
134	SA18		
133	SA17		
132	SA16		
129	SA15		
128	SA14		
127	SA13		
126	SA12		
125	SA11		
124	SA10		
123	SA9		

No.	Pin name	Dir.	Pin Functions
122	SA8	IN	Connect address bus of central processing unit.
121	SA7		
120	SA6		
119	SA5		
118	SA4		
117	SA3		
116	SA2		
115	SA1		
114	SA0		
99	SAD7	I/O	Connect a data bus of central processing unit.
100	SAD6		
101	SAD5		
102	SAD4		
108	SAD3		
109	SAD2		
110	SAD1		
111	SAD0		
97	XSRD	IN	Be connected to a RD signal of central processing unit.
98	XSWR	IN	Be connected to a WR signal of central processing unit.
96	XSCL1	IN	It is chip select signal from central processing unit. XSRD/XSWR becomes effective at the time of LOW this signal.
95	XSWAIT	OUT	It is the WAIT output for central processing unit. This terminal must leave access from central processing unit at the time of LOW.
94	XSDREQ	OUT	It is a DMA demand for central processing unit. LOW level hip of this terminal falls down and activates DMA transfer with an edge.
93	SDACK	IN	It is DMA answer back. Data are output with HIGH this signal by SAD (7:0).
112	XIRQ10	OUT	It demand interrupt for central processing unit with LOW. Both terminals can set it with a register whether they output it.
113	XIRQ11		
141	FGPL/PE3	IN	Input a turn pulse from spindle motor.
147	FPWM	OUT	It is 7bitPWM output terminal for FG servo. It is the 3 value output of HIGH,LOW, high impedance.
146	VPWM	OUT	It is 5bitPWM output terminal for speed servo. It is the 3 value output of HIGH,LOW, high impedance.
143	PPWM	OUT	It is pulse width modulation output terminal for phase servo. It is the 3 value output of HIGH,LOW, high impedance.
142	RERR	OUT	It is control output for rough servo. It is the 3 value output of HIGH,LOW, high impedance.
31	PA7	I/O	It is general-purpose I/O port. By setting of a $70 register, You can select a function. CDDO inputs a digital out signal from a CD decoder. DIFOUT is digital audio output terminal based on IEC958. BCA is terminal to input a BCA code into. RWDIN is terminal to input a WOBBLE signal into. BCA/RWDIN terminal becomes necessary with RW revitalization machines.
32	PA6		
33	PA5		
34	PA4		
35	CDDO/PA3		
36	DIFOUT		
196	BCA/PA1		
195	RWDIN/PA0		

No.	Pin name	Dir.	Pin Functions
138	PD7/STATUS2	OUT	It output a various monitor signal (STATUS (2:0)). By setting of a $ 70 register, You can use it as a general-purpose I/O port port.
139	PD6/STATUS1		
140	PD5/STATUS0		
151	DUTY50	OUT	It always output a pulse of duty 50%. It give reference voltage of a various PWD signal of the recovery system.
160	ASC	OUT	It output frequency error of a sink period as a PWD pulse.
153	APC	OUT	It output a phase error of phase locked loop as a PWD pulse.
159	ATC	OUT	It output a direct current error of a RF signal as a PWD pulse.
152	AFC	OUT	It output VC OCL k and frequency error of reference clock as a PWD pulse. It is the 3 value output of HIGH,LOW, high impedance.
163	DEFECT/PE1	IN	It is the diffect signal input from the outside. Then a phase error of phase locked loop outputs this terminal in HIGH (APC), and it is done front value hold.
162	T_DET/PC7	OUT	It output a tangential-tilt search result as a pulse width modulation pulse.
70	DA13	OUT	It is address signal of DRAM for a VBR buffer.
71	DA12		
72	DA11		
75	DA10		
76	DA9		
77	DA8		
80	DA7		
81	DA6		
82	DA5		
83	DA4		
86	DA3		
87	DA2		
88	DA1		
89	DA0		
39	DD15	I/O	It is a data bus of DRAM for a VBR buffer.
42	DD14		
43	DD13		
44	DD12		
45	DD11		
46	DD10		
47	DD9		
48	DD8		
49	DD7		
55	DD6		
56	DD5		
57	DD4		
58	DD3		
59	DD2		
60	DD1		
61	DD0		

No.	Pin name	Dir.	Pin Functions
69	XDRAS	OUT	It is a RAS signal of DRAM of a VBR buffer.
67	XDCAS/XDCASL	OUT	It is a CAS signal of DRAM of a VBR buffer.
66	XDOE/DQML	OUT	It is an OE signal of DRAM of a VBR buffer.
65	XDWE	OUT	It is a WE signal of DRAM of a VBR buffer.
13	SDATA7	OUT	It is a data output bus of a VIDEO_DMA channel. Be connected to MPEG decoder.
14	SDATA6		
19	SDATA5		
20	SDATA4		
21	SDATA3		
22	SDATA2		
23	SDATA1		
24	SDATA0		
29	SREQ	IN	It is a data transfer demand terminal of a VIDEO_DMA channel. Be connected to MPEG decoder. You can change polarity by setting.
25	XSACK/PC5	OUT	It is a transfer reply terminal of a VIDEO_DMA channel. Be connected to MPEG decoder. Output form varies with setting.
28	XWR	OUT	It is a transfer reply terminal of a VIDEO_DMA channel. Be connected to MPEG decoder. Output form varies with setting.
30	XAVTRM/PC6	OUT	It is a signal to show the top of a sector of transfer data of a VIDEO_DMA channel in.
7	DSPA0/PC0	OUT	When it connects Motorola Digital Signal Processor as destination of an AUDIO_DMA channel, it is the signal which gives a DMA address to Motorola Digital Signal Processor.
8	DSPA1/PC1		
9	DSPA2/PC2		
206	ASDATA0/PB0	I/O	It is general-purpose I/O port. By setting of a $70 register, It become a data output bus of an AUDIO_DMA channel besides a port.
205	ASDATA1/PB1		
204	ASDATA2/PB2		
203	ASDATA3/PB3		
202	ASDATA4/PB4		
201	ASDATA5/PB5		
200	ASDATA6/PB6		
199	ASDATA7/PB7		
10	XAWR	OUT	It is a transfer reply terminal of an AUDIO_DMA channel. Output form varies with setting.
11	XASACK	OUT	It is a transfer reply terminal of an AUDIO_DMA channel. Output form varies with setting.
12	ASREQ	IN	It is a transfer demand terminal of an AUDIO_DMA channel. You can change polarity by setting.
192	BCK	OUT	It is the bit clock output to DAC.
193	LRCK	OUT	It is the LRCK signal output to DAC.
194	ADATA0	OUT	It is the serial data output to DAC.
187	CDBCK	IN	It input a bit clock from a CD decoder. Prospective frequency is 2.1168MHz(48fs).
186	CDLR	IN	It input a LRCK signal from a CD decoder.
185	CDDT	IN	It input audio system data from a CD decoder.
181	WFCK	IN	It is frame clock signal of a CD.
180	SCOR	IN	It is input terminal of assistant code sink of a CD.

No.	Pin name	Dir.	Pin Functions
179	SBSO	IN	It is an assistant code data input terminal of a CD.
184	EXCK	OUT	It is a shift clock making timeliness to send data forth on a SBSO terminal.
188	C2FI/PE2	IN	It is input terminal of C2 error flag from a CD decoder.
136	FSX/STATUS4	I/O	It input a FSX signal from a CD decoder. FSX signal is 7.35Khz at normal speed with frame alignment signal of error correction of CIRC. By setting of a $7F register, It become the internal monitor output (STATUS 4).
137	EFLG/STATUS3	I/O	It input an EFLG signal from a CD decoder. An EFLG signal is a monitor signal of error correction processing movement of CIRC. By setting of a $7F register, It become the internal monitor output (STATUS 3).
172	AIN	IN	It is analog RF signal input terminal to built-in A/D converter.
168	VRT	IN	It is reference voltage input terminal of built-in A/D converter.
169	VRTS	OUT	Connect with VRT.
170	VRC	OUT	It is center voltage output terminal of built-in A/D converter.
174	VRB	IN	It is reference voltage input terminal of built-in A/D converter.
173	VRBS	OUT	Connect with VRB.
37	CKE/PD3	OUT	It is an Enable signal of SDCLK.
38	CSB/PD2	OUT	It is chip select signal of SDRAM.
62	SDCLK	OUT	It is a terminal outputting a movement clock of SDRAM.
68	XCASH/DOMH	OUT	When it uses DRAM of bus 16 wide bit, it is a CAS signal of high rank 8bit.
197	VREQEN/PD1	I/O	It is an Enable signal of Video-REQ.
198	AREQEN/PD0	I/O	It is an Enable signal of Audio-REQ.

7.3 DISC / CONTENT FORMAT PLAYBACK COMPATIBILITY

Disc / Content Format Play-back Compatibility

General Disc Compatibility

- This player was designed and engineered to be compatible with software bearing one or more of the following logos.

DVD-Audio DVD-Video DVD-R DVD-RW

Audio CD Video CD CD-R CD-RW

Super Audio CD

- Other formats, including but not limited to the following, are not playable in this player:

  Photo CD, DVD-RAM, DVD-ROM, CD-ROM

- DVD-R/RW and CD-R/RW discs (Audio CDs and Video CDs) recorded using a DVD recorder, CD recorder or personal computer may not be playable on this machine. This may be caused by a number of possibilities, including but not limited to: the type of disc used; the type of recording; damage, dirt or condensation on either the disc or the player s pick-up lens. See below for notes about particular software and formats.

CD-R/RW Compatibility

- This unit will play CD-R and CD-RW discs recorded in CD Audio or Video CD format, or as a CD-ROM containing MP3 audio files. However, any other content may cause the disc not to play, or create noise/ distortion in the output.
- This unit cannot record CD-R or CD-RW discs.
- Unfinalized CD-R/RW discs recorded as CD Audio can be played, but the full Table of Contents (playing time, etc.) will not be displayed.

DVD-R/RW Compatibility

- This unit will play DVD-R/RW discs that were recorded using the DVD Video format or Video Recording format.
- This unit cannot record DVD-R/RW discs.
- Unfinalized DVD-R/RW discs cannot be played in this player.

7.4 CLEANING

Before shipping out the product, be sure to clean the following positions by using the prescribed cleaning tools:

Position to be cleaned	Cleaning tools
Pickup lenses	Cleaning liquid : GEM1004 Cleaning paper : GED-008

8. PANEL FACILITIES

Front panel

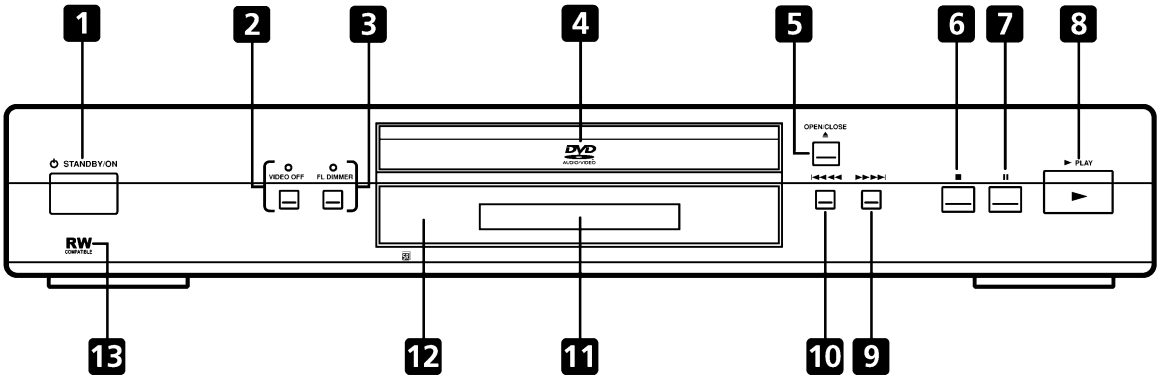

1 ⏻ STANDBY/ON
Press to switch the player on or into standby

2 VIDEO OFF button/indicator
Press to switch the video output on/off. The indicator lights when the video output is switched off (when listening to a DVD-Audio disc, for example)

3 FL DIMMER button/FL OFF indicator
Press to change the brightness of the front panel display and **VIDEO OFF** indicator in four steps: maximum brightness, medium brightness, minimum brightness, and off. When the display is turned off, the **FL OFF** indicator Lights.

4 Disc tray

5 ⏏ OPEN/CLOSE
Press to open or close the disc tray

6 ■
Press to stop the disc (you can resume playback by pressing ► (play))

7 ❚❚
Press to pause playback. Press again to restart

8 ►
Press to start or resume playback

9 ►► ►►|
- Press and hold for fast forward scanning
- Press to jump to the next chapter or track

10 |◄◄ ◄◄
- Press and hold for fast reverse scanning
- Press to jump back to the beginning of the current chapter or track, then to previous chapters/tracks

11 Display

12 Remote control sensor
The remote control has a range of up to about 7m

13 RW COMPATIBLE
Ths mark indicates compatibility with DVD-RW discs recorded on a DVD recorder in Video Recording mode

Rear panel

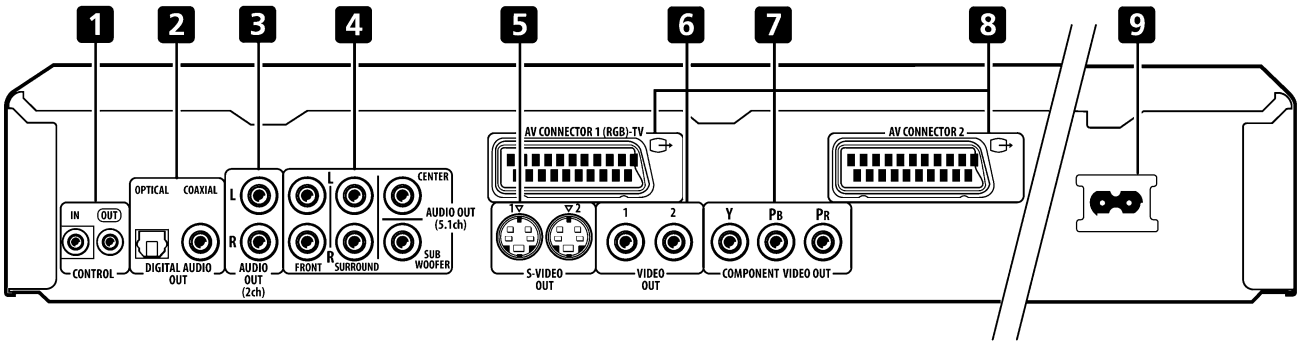

When connecting this player up to your TV, AV receiver or other components, make sure that all components are switched off and unplugged.

1 CONTROL IN / OUT

For passing remote control signals to other Pioneer components.

2 DIGITAL AUDIO OUT – OPTICAL / COAXIAL

Digital audio outputs for connection to a PCM, Dolby Digital, DTS and/or MPEG-compatible AV receiver.

3 AUDIO OUT (2ch)

Two channel analog audio outputs for connection to your TV, AV receiver or stereo system.

4 AUDIO OUT (5.1ch)

Multichannel analog audio outputs for connection to an AV receiver with multichannel inputs.

5 S-VIDEO OUT

S-video outputs that you can use instead of the video output described in **6** below.

6 VIDEO OUT

Standard video outputs that you can connect to your TV or AV receiver using the supplied audio/video cable.

7 COMPONENT VIDEO OUT

High quality video output for connection to a TV, monitor or AV receiver that has component video inputs.

Connect using a commercially available three-way component video cable. Be careful to match the colors of the jacks and cables for correct connection.

8 AV CONNECTOR

AV CONNECTOR 1 (RGB)-TV

Use a 21-pin SCART cable to connect to a TV or monitor compatible with this type of connection. Both audio (2 channel stereo) and video (Video, S-video, and RGB) signals are output from the **AV CONNECTOR 1 (RGB)-TV**.

AV CONNECTOR 2

Use a 21-pin SCART cable to connect to a VCR.

9 AC IN

Connect the supplied power cord here, then plug into a power outlet.

Display

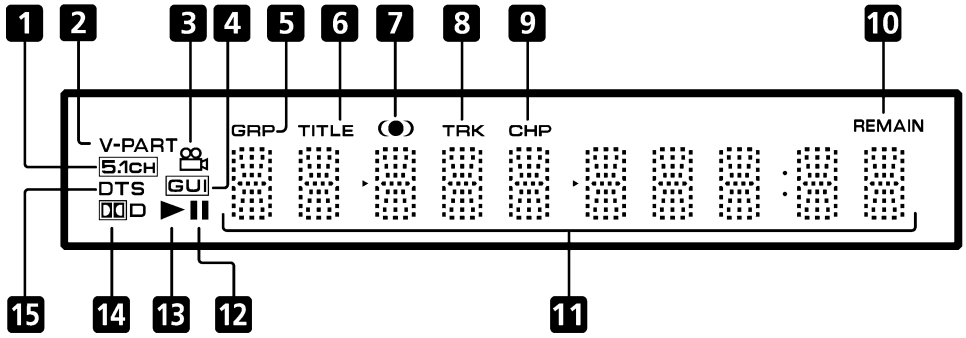

1 5.1CH
Lights when analog 5.1 channel output is selected

2 V-PART
Lights when playing a video part of a DVD disc

3
Lights during multi-angle scenes on a DVD disc

4 GUI (Graphical User Interface)
Lights when a menu is displayed on-screen

5 GRP
Indicates that the character display is showing a DVD-Audio group number

6 TITLE
Indicates that the character display is showing a DVD-Video title number

7
Lights when V/TruSurround is active

8 TRK
Indicates that the character display is showing a track number

9 CHP
Indicates that the character display is showing a DVD chapter number

10 REMAIN
Lights when the character display is showing the time or number of tracks/titles/chapters remaining

11 Character display

12
Lights when a disc is paused

13 ►
Lights when a disc is playing

14 D
Lights when a Dolby Digital soundtrack is playing

15 DTS
Lights when a DTS soundtrack is playing

Remote control

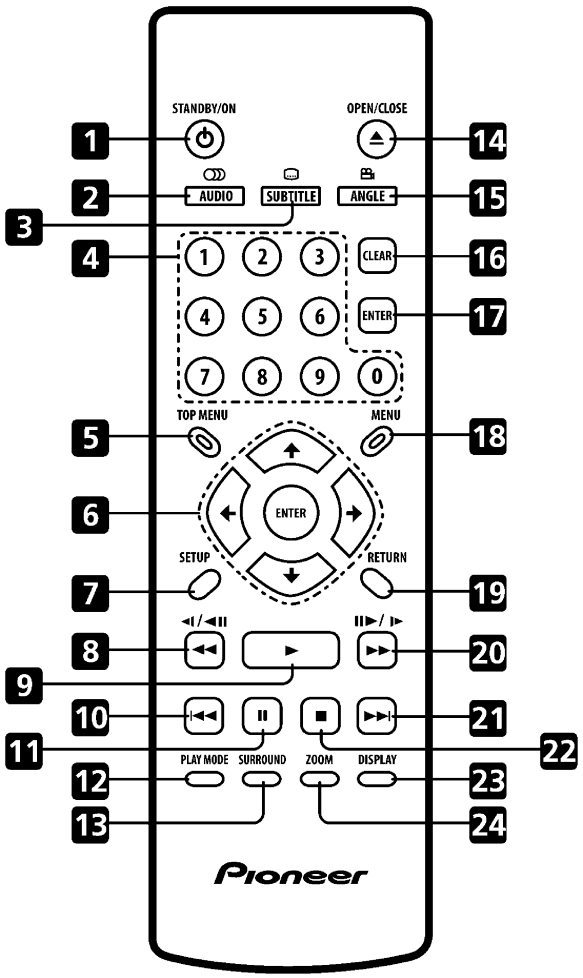

1 ⏻ STANDBY/ON
Press to switch the player on or into standby

2 AUDIO
Press to select the audio channel or language

3 SUBTITLE
Press to select a subtitle display

4 Number buttons

5 TOP MENU
Press to display the top menu of a DVD disc

6 ENTER & cursor control buttons
Use to navigate on-screen displays and menus. Press **ENTER** to select an option or execute a command

7 SETUP
Press to display (or exit) the on-screen display

8 ◄◄ and ◄I/◄II
Use for reverse slow motion playback, frame reverse and reverse scanning.

9 ►
Press to start or resume playback

10 ⏮
Press to jump to the beginning of the current chapter or track, then to previous chapters/ tracks

11 ⏸
Press to pause playback; press again to restart

12 PLAY MODE
Press to display the Play Mode menu (You can also get to the Play Mode menu by pressing **SETUP** and selecting **Play Mode**)

13 SURROUND
Press to activate/switch off DD V/TruSurround

14 ⏏ OPEN/CLOSE
Press to open or close the disc tray

15 ANGLE
Press to change the camera angle during DVD multi-angle scene playback

16 CLEAR
Press to clear a numeric entry

17 ENTER
Use to select menu options, etc. (works exactly the same as the **ENTER** button in 6 above)

18 MENU
Press to display a DVD disc menu, or the Disc Navigator if a DVD-RW, CD, Video CD or MP3 disc is loaded

19 RETURN
Press to return to a previous menu screen

20 ⏩ and ⏸►/►
Use for forward slow motion playback, frame advance and forward scanning.

21 ⏭
Press to jump to the next chapter or track

22 ■
Press to stop the disc (you can resume playback by pressing ► (play))

23 DISPLAY
Press to display information about the disc playing

24 ZOOM
Press to change the zoom level